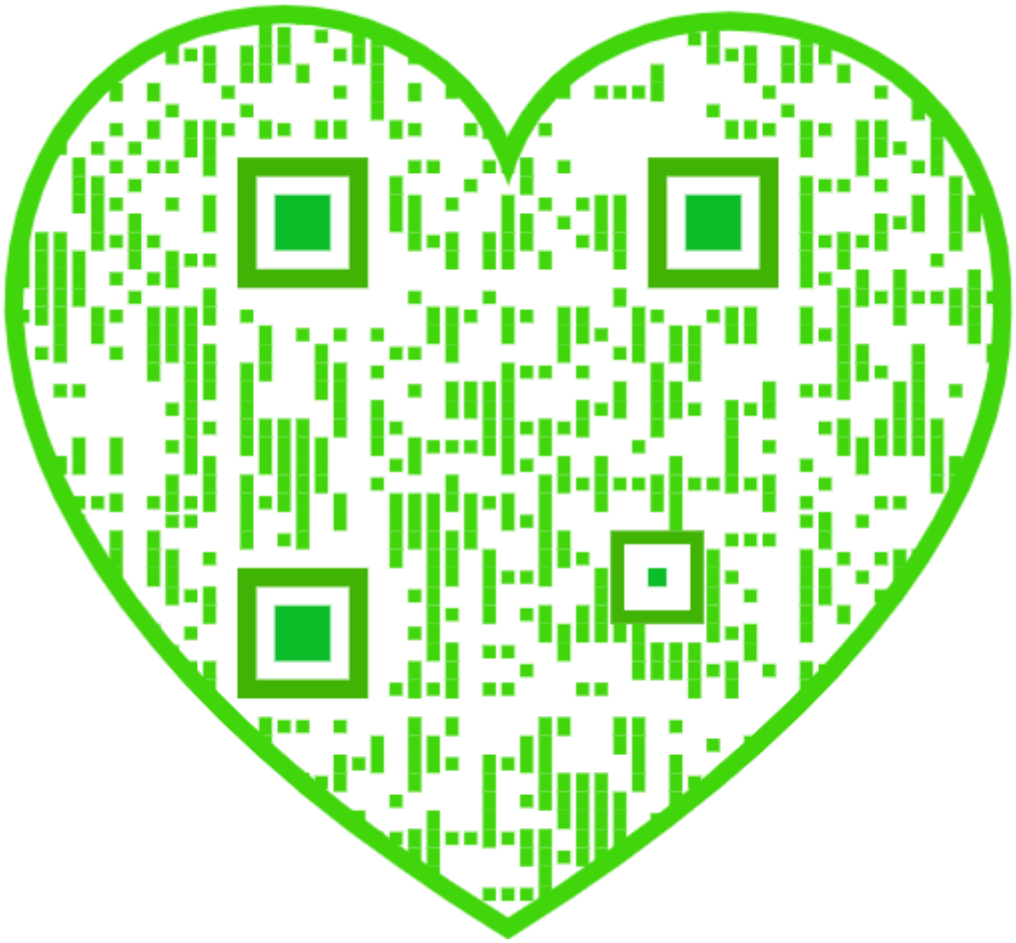

74:71
Countway Medical Library
CANCELLED.

BY-LAWS RELATIVE TO TAKING BOOKS FROM THE BOSTON ATHENÆUM.

I. PROPRIETORS of Shares and Life Share holders, by paying an annual assesment of *five dollars*, shall have a right to take out books from the Athenæum. Also, such subscribers to the Scientific library as have already complied with the conditions of the transfer of that library to the Athenæum, and paid the first assessment, shall by paying an annual assessment of *ten dollars*, have the right to take out Books in the same manner as the Proprietors; provided, however, that this right shall cease upon failure to pay this annual assessment, and that no person shall have a right to take out any Book till all assessments and other dues are paid.

II. Any person entitled to take out Books under the last article, may have, at any one time, three Volumes.

III. Books may be kept out of the library one calendar month, and no longer, and every person shall be subjected to a fine of twenty cents a week for every volume retained beyond that time.

IV. Every book shall be returned in good order, regard being had to the necessary wear of the book, with good usage. And if any book shall be lost or injured, the person to whom it stands charged shall replace it by a new volume or set, if it belonged to a set, or pay the current price of the volume or set to the librarian; and thereupon, the remainder of the set, if the volume belong to a set, shall be delivered to the person so paying for the same.

V. All books shall be returned to the library for examination on the second Wednesday of May annually, and remain one fortnight. And every person then having one or more books, and neglecting to return the same, as herein required, shall forfeit and pay a fine of one dollar.

VI. When a written request sha ll be left with the librarian for a particular book then out, it shall be the duty of the librarian to retain the same, for the person requesting it, for one day after it shall be first returned.

VII. The librarian will attend, for the delivery and return of Books, from noon till two o'clock every day, Sundays excepted.

VIII. The Trustees may, on special occasions, permit any person to use the Books belonging to the Athenæum, under such restrictions as they may think proper to impose.

IX. Very rare or costly Books, which cannot easily be replaced, are not to be taken from the Athenæum, except by a vote of the Trustees; and the new periodical Publications and the new Works imported from Europe, shall be withheld from circulation, so long as the Trustees may deem expedient.

N. B. Persons sending for Books are requested to make a *written* order for them, and mark in it the *number* of the shelf and the *first* words of the titles as they stand in the printed catalogue.

ART

OF

PRESERVING THE SIGHT

UNIMPAIRED TO AN EXTREME OLD AGE;

AND OF RE-ESTABLISHING AND

STRENGTHENING IT WHEN IT BECOMES WEAK:

With Instructions how to proceed in
Accidental Cases which do not require the Assistance of Professional Men,
And the Mode of Treatment proper for the Eyes
During, and immediately after, the Small-Pox.

To which are added

OBSERVATIONS

On the Inconveniences and Dangers arising from the Use of
COMMON SPECTACLES.

CANCELLED

BY

AN EXPERIENCED OCULIST.

SIXTH EDITION,

Considerably augmented and improved.

LONDON:

HENRY COLBURN AND CO. CONDUIT STREET.

1824.

11275

LONDON:
PRINTED BY B. CLARKE, WELL STREET.

CONTENTS.

SECTION I.

General Observations on the Mode of preserving the Eyes in a healthy State ..... *Page* 1

CHAP. I. On the daily and constant Care which ought to be taken with respect to the Eyes in a state of Soundness ..... ib.

§ 1. Treatment of the Eyes on awaking in the Morning ..... ib.

§ 2. On the particular Care which ought to be taken of the Eyes during the Day, even whilst unemployed 23

§ 3. Care of the Eyes in the Evening, and during the Night 57

CHAP. II. On the Moderate Use of the Eyes in general 74

CHAP. III. On the prudent Use of the Eyes in the various Stages of Existence 121

CHAP. IV. On the most proper Seasons for the Exercise of the Eyes 153

CHAP. V. The Care of the Eyes in various Species of Labour and Employment 158

CHAP. VI. On the Relaxation of the Sight after Cases of Extreme Tension of the Optic Nerve..... 173

CHAP. VII. Rules to be adopted by such unfortunate Patients as have lost an Eye 183

SECTION II.

Of the best Mode of Treatment for Weak Eyes .. *Page* 187
CHAP. I. Of the Care continually necessary for the Preservation of Weak Eyes 191
CHAP. II. On the Regulation of Exercise for Weak Eyes, both in general and particular Cases..... 201
CHAP. III. On the Choice of Labour or Employment most judicious for weak Eyes 204
CHAP. IV. On the Species of Relaxation most proper for Weak Eyes 208
CHAP. V. On the Conduct which ought to be observed both by the Long and Near-sighted 211
CHAP. VI. On the Treatment proper for the Eyes after severe Illness 218

SECTION III.

How the Eyes ought to be treated in Cases of unforeseen Accidents, but which are not of such immediate Import as to require any professional Operation..... 223
CHAP. I. Of the best Mode of Expulsion of any extraneous or foreign Matters which may intrude between the Pupil and the Eyelid ..... ib.
CHAP. II. Treatment of the Eyes when stung by any Insect 232
CHAP. III. Treatment of the Eyes when any Contusion has taken place in their Vicinity, and also when a Wound has bled..... 234
CHAP. IV. Of the Treatment of the Eyes after any sudden Stoppage of the Perspiration of the Face.... 238
CHAP. V. Treatment of the Eyes during and after the Small-Pox 240
CHAP. VI. Inconveniences and Dangers of the common Kind of Spectacles..... 249

PREFACE.

THE VISUAL FACULTY is that sense which, of all our exterior ones, affords us the most extensive, the most constant, and the most varied, sources of pleasure and delight.

Even in the declining years of a lengthened life, we remember, and in the remembrance enjoy, all the gratification which has arisen, and that in our juvenile days, from the charms of romantic scenery, from the contemplation of exquisite paintings; and, in short, all the objects which have ever delighted us through the medium of the outward sense, are still visible in the *mind's eye.* It may, indeed, be said, that the outward organ procures for us new pleasures in each succeeding moment, whilst all the other senses, which impel us towards enjoyments without ceasing, cannot present us with even one so desirable, so versatile, and yet so harmless to the animal economy.

How soon, for example, does the remembrance of the most harmonious concert escape us, even though we have listened to it with the greatest satisfaction and attention!—In vain do we endeavour to bring to memory those mellifluous concords which charmed us, or the lively sensations they excited; whilst the simplest object, that we have but once seen, presents itself, as if immediately before our eyes, with all its minutiæ, and with such precision, that we are even capable of painting it, after a lapse of years, with all its varieties of light and shade.

Shall we, then, neglect an organ whose effects are so precious?—Neglect!—nay, do we not often, with the most culpable rashness, abuse or tamper with it in such a manner, that it is matter of astonishment there should be so few deprived of its use, considering the treatment which it receives?

Much, then, does this subject require the public attention; but it must be premised, that we can never expect to preserve the eyes in a state of sound health, or even to be assured of their meeting with that moderate treatment so necessary to this, the most delicate of all our

organs of sense, if, whenever we feel the slightest indisposition in them, we have recourse to the ignorant and interested, or trust them to the care of advertising quacks.

To guard against this is the object of the following short and popular Essay; and my wishes will be fully gratified, if it shall have the effect of protecting the public against error, and of inducing them to pay a more particular attention to the care and preservation of this sense, on which, it may be said, depends a great portion of human happiness; particularly when it is considered how much, of late years, the disorders of the organ have increased both in number and variety.

Every professed oculist will acknowledge how often he has been asked respecting the best mode for the preservation of the eye-sight; how often inquiry has been made respecting the treatment of eyes already weakened; nay, even in what manner accidental cases are to be treated, where it may be totally impossible to procure regular advice.

Information of this kind it cannot be expected that an oculist will give; neither his time

nor his profession will admit of it: nor is it possible for him to adapt any short advice to all possible cases, either for absolute cure or preservation, even though he were a practitioner of the most extensive experience and practice. Such a man, however, is the only person qualified to offer good advice in a detailed manner; and it is upon the ground-work of such practice that I have drawn up the following practical rules, deduced from long observation and experience, not only in the cure of disordered eyes, but in the means necessary for the preservation of weak ones, and that in a most extreme variety of cases, embracing individuals in all ranks of life, and in every mechanical art and profession.

This infinite difference, then, in the causes of ocular morbidity, and which I have had such opportunities of investigating closely, has tended to point out those various symptoms which, though at first of trivial appearance, are yet of the most serious importance, and, in fact, expressly proceed from improper treatment of the eyes, under the various circumstances connected with the situation and profession of individuals of all ranks.

Guided by this experience, I shall use all my efforts, therefore, to point out to each not only the great, but even apparently trifling, abuses, to which he daily exposes the visual organ; and, after noticing the degree of circumspection necessary, shall endeavour to give, with prudence and precision, that method which is most proper for each individual to adopt for the preservation of his eyes in a healthy state.

Great will be my recompense, if I shall have the satisfaction of perceiving that my hints are judiciously applied; for nothing can be more distressing to the professional man, nothing indeed can be more distressing to a benevolent heart, than to see, as is too often the case, unhappy victims suffering from their own neglect, without any likely mode of relief, nay, without the slightest hope of a cure; and where we are even obliged to refuse that assistance, now become useless, from the patient having neglected even simple attention to the care of an organ so delicate and so precious. In speaking thus boldly of my own advantages in this department of the *Medical Art*, I may have given reason to some to doubt my promises, particularly if they should draw their inferences from

the superficial boasting of every-day quacks, and from their pompous advertisements; but, if I do not actually fulfil these promises to their utmost extent, I shall still expect credit for useful hints—for observations not uninteresting, and which are given in simple language, though sometimes detailed in such a manner as may displease the more scientific reader, but in a manner which I have considered as the most useful and the most requisite for those whom I wish to serve—I mean, for the MANY!

This, then, I offer as a little manual of general utility, and one which even professional men may read with advantage, if it shall prompt them to treat their subject sometimes with less obtrusive science, and with greater simplicity; for, although we have many good works in this branch of medical art; yet these are all too abstruse for general readers, and none of them treat of those points which ought to be addressed to such, but are, in fact, written expressly for professional men.

On the contrary, in this little work, I have endeavoured to bring every thing within reach

of my simplest readers, and of those who have the least time and opportunity for study, offering them a manual of precepts and preservatives, of whose efficacy they will soon be convinced by a little plain experience.

Those, indeed, who expect to find here a medical work, filled with recipes, will alone be disappointed, as I have carefully avoided the details of any of those specific morbid affections which absolutely require surgical aid; and this I have done, lest the inexperienced should be tempted to try remedies which, in their hands, might have the most dangerous consequences to an organ so delicate as the eye: again repeating that here I have alone offered the means of preservation, or the gentlest means of relief, and of checking the first approaches of morbid sensation, leaving, as ought to be done, all points of absolute medical treatment and cure to the care of the regular oculist, who alone, in all important cases, ought to be consulted.

whence it happens, particularly in large cities, that our bed-chambers are, for the most part, very gloomy, often dark. We see, also, that many people imagine that they can never be too much so; so that the windows are not only provided with close shutters, but even the beds are closed round with thick curtains, lest the slightest noise, or the faintest ray of light, should intrude to disturb their rest.

How often have I found my breast affected, and the action of my lungs impeded, on entering into the suffocating atmosphere of these murky dens!—sensations which must, likewise, often have been felt and suffered by my medical brethren. How is it possible, indeed, that human nature can exist, in a healthy state, in such a vortex of pestiferous vapour? How is it possible that those, whose employments through the day require a forcible exertion of the visual faculty, shall remain exempt from the unhappy consequences of nights thus spent? In

short, may we not rationally suppose, that these circumstances tend much to produce those ricketty objects and faded figures so often to be seen in large towns, whose complexions have as little resemblance to rural health as the first sketches of a design have to a finished painting?

Not only are people thus shut up in a temporary prison, in itself destructive of health, but they are also in the constant habit of passing suddenly from these nocturnal dungeons to the lightest apartment in their houses—a conduct in itself so palpably injurious to the eye-sight, that it is a well-ascertained fact, that even the most constant habitude to such a mode of life does not seem to guard against its ill effects.

It is true, that in general we do not perceive any sudden derangement of the sight take place from this procedure; but it is no less true, that its final consequences, however unnoticeable at first, will eventually display themselves sooner

or later, with all who give way to those bad habits; whilst, on the other hand, I can speak to many instances where persons, who have avoided these errors, have preserved their eyes to a good old age.

The first daily rule which I would recommend for the preservation of this precious organ, whilst it is perfectly sound, is, that we should not expose ourselves suddenly, after first awaking, to a great glare of light.

To adhere to this rule to its full extent, the most important principle is, not to allow our bed-chamber to be too much darkened. The windows ought solely to be furnished with green curtains; and these ought not to be drawn aside immediately on awaking; at least we ought to postpone it a few minutes, until the eyes, prepared by a moderated light, may escape being too much dazzled by the broad glare of day.

Where it is possible or convenient, I would also recommend, in order that the

portion of light permitted to pass through the curtains may not incommode the sleeper, that the bed-chamber should not be exposed to an eastern aspect. No doubt, many of my readers may here exclaim, "What! must we then be at the trouble of choosing a chamber, or how is it possible for every person to be thus accommodated?"—The reply, however, is simple, and the remedy easy; for if we cannot always have a chamber with a proper aspect, we may, in general, have our beds so disposed, that the broad light shall not strike direct upon our eyes, unless, indeed, that we prefer a fanciful arrangement of the furniture of our apartments before the preservation of our health.

Some persons may think that I have been too particular upon this point. Some may even doubt the possibility of wilful adherence to certain forms of domestic arrangement in preference to considerations of salubrity: but in answer I can aver, that in the course of my practice I have too

often met with obstinate people, who, from an unwillingness to adopt my advice, have actually continued to suffer much bodily inconvenience.

It often happens, also, that we choose the smallest apartments for sleeping in, in order to preserve the large ones for the crowded parties of the present day; and this we do without reflecting that, in addition to the detriment to our sight, we also suffer much from the bad effects of the confined ventilation of these little dens.

If, however, we are obliged to sleep in apartments opening to the east, and to have our beds exposed to the morning light, surely it is not difficult to have thicker curtains for the windows, or even to have a dark screen placed to moderate the action of that light, so as that the eyes may not be too forcibly struck on first awaking. In order to fix the importance of this precept more strongly in the imagination of my readers, I shall recite the following anecdote.

In the course of my practice I was called to a young person, who, in all respects in perfect health, had stopped at an inn, and slept in a chamber whose windows opened upon a white-washed wall, from whence the rays of the morning sun were so strongly reflected as to awake him suddenly from his slumbers. He arose in order to close the curtains, which were of white calico, and consigned himself again to repose, but was, however, soon disturbed more disagreeably than before, by the direct rays of the sun, which now darted upon his eyes through the glaring curtains. An immoderate flow of tears, accompanied by an almost insupportable contraction of the eyes, and by an inflammation of the eye-lids, was the immediate consequence of these circumstances; but even that might have been easily cured, if the patient had not foolishly exposed himself on the following morning to the same inconvenience, by injudiciously sleeping in the same apartment. Hitherto I had not been called

in, nor indeed for a few days after, when I discovered the cause, and he was accommodated in another chamber; but the cure was slow: a weakness of the eyes continued for a considerable time; and, even up to a very late period, the patient has been unable to bear the action of the wind, or the slightest increase of bodily warmth from exercise, without a considerable inflammation of the organ, and a copious flow of watery humours.

I could, indeed, recite several examples to the same effect; and also of many people who, from similar causes, have suffered from disorders in the eyes for many years, and who now consider themselves much my debtors, for having first prompted them to reflect upon the primary cause of their evils.

To return—Not only is the effect of a glare of light prejudicial to the eye-sight at the moment of awaking, but much inconvenience also arises from that most pernicious, yet I may say rooted, custom of rubbing the eyes in the morning.

Those who are in perfect health, and whose daily occupations do not lay them under the necessity of forcing the sight, do not readily perceive the harm which arises from this inconsiderate habit; but with all those who are obliged, more or less, to force the visual organ, the bad consequences are soon perceptible. We often see, indeed, people who, during their whole existence, are troubled with inflamed and running eyes; and it is not going too far to say, that the primary cause of these evils has been, in numberless instances, the pernicious custom of rubbing the eyes on first awaking.

On this part of the subject, then, I come to the second rule, which is, that if we are indispensably prompted to rub the eyes on first awaking, it ought not to be done rudely, but merely by passing a wetted finger over the eye-lids, if we find it difficult to open them.

Many delicate females will, no doubt, smile at this; but the smile would be one

of approbation, if they would condescend, by a little plain experience, to judge of the efficacy of this simple rule: nor is it too much to suppose, that if the healthy saliva which amalgamates itself, as it were, with every mouthful we eat, is so essential for digestion, so it may be highly beneficial to the eyes, perhaps more so than any heterogeneous liquid. Indeed, the fact is proved by the experience of many persons, in the course of my practice, who for years have found considerable difficulty at first opening of their eyes, and who have been perfectly cured, after a short adherence to this simple practice.

It is a curious and important fact, and one well known to oculists in general, that the human eye will bear the deepest incisions, done with cutting instruments, without any serious detriment to the sight; whilst, at the same time, the slightest wounds, even the most insignificant accidents, if accompanied by contusion, are always extremely dangerous. For in-

stance, we always observe, that in those operations in which it is necessary to raise that covering of the eye called the "tunic," a large incision is made in the pupil, which soon after closes without even the slightest cicatrice, whilst, at the same time, this part of the organ is sensibly affected even by the slightest degree of pressure. It is for this reason that those wounds of the eye which contract the parts too strongly, or even lacerate them, are not always the most hurtful for the sight, unless they should be accompanied by its total extinction.

Whilst on this subject, I may be permitted to state one instance, that may serve as a warning to my readers in similar cases.

I was called in, some years ago, to the case of a strong healthy man, who had always enjoyed a most excellent sight, until a short time previous, when he had become totally blind from the following incident. One day he happened to be engaged with a party of friends, when some

person entered the room without his noticing it, who ran familiarly to cover his eyes with his two hands, desiring him to guess who it was that blinded him. Either unable, or perhaps not choosing to guess the person's name, he endeavoured to disengage himself from his hands; but the stronger effort he made for that purpose, the more forcibly did the other press his hands upon his eyes, and this so long, and with such deadly effect, that the unfortunate man, when permitted to open his eyes, found himself totally blind, although there was no apparent hurt done to the organ!

From an accident so melancholy in its consequences, we may well judge how detrimental the slightest pressure may sometimes be to a faculty so tender and so valuable. I may also add to my general observations, that it is by no means rare for an eye-lash, or single hair, to bend into the eye during the common operation of rubbing, a circumstance which, however

apparently trivial, often excites the most painful and obstinate inflammation, and is frequently followed by the loss of the eye, of which, indeed, I was a witness in the following case. I had been called in to a sick person, who for many months had an eye affected by a violent and exquisitely painful inflammation, proceeding from a hair which had insinuated itself deeply between the pupil and the eye-lid whilst he had been rubbing it with his fingers. This I discovered by a close inspection; for the eye-lids were so dreadfully swelled, that I could scarcely see the pupil, and I as happily extracted it; when the disorder, which had hitherto resisted all remedies, speedily abated, and was soon perfectly cured.

It is in this part of my subject that I can, with most propriety, attack an abuse which is so deeply rooted with all classes of society, but principally with that which is the most numerous, and with whom, indeed, the strongest and most reiterated

advice is too often thrown away. The error to which I allude is, that no sooner do they experience the slightest complaint in the eyes, which are never so strong as not to feel inconvenience from a sudden glare of light, than they immediately screen the organ from the common action of the air, and of the light of day, and often cover the eyes with a quantity of linen, closely folded, so as to compress the organ, and to increase the evil.

I here assert, and will refer it to the opinion of oculists in general, that this most injudicious practice is often the cause of most painful and dangerous ophthalmia, and is often followed by entire blindness; for a slight flow of humour, or a little extravasated blood, which would have been absorbed, and have disappeared of itself in a few days, is thus encouraged to degenerate into a thickness of the aqueous humour in the chrystalline part of the eye, or into a malignant ulcer, nay, sometimes into an abscess, and that merely from this

injudicious mode of guarding the part affected from the sanative action of broad day, and of the atmospheric influence. Thus it too often happens, that this valuable organ, which was even but slightly indisposed, becomes absolutely so in effect; and that a trifling ailment is quacked into a state of morbidity, which bids defiance to the best care of a judicious operator.

I will acknowledge, indeed, that the eye is so wisely formed by Nature, that it soon accustoms itself, and becomes habituated, to this state of obscurity, even when deprived of that excitement so essential to sound health; but then, the more it is guarded from this excitement, the more morbidly sensitive it becomes, and the longer time will it be before it can be fit to exercise its proper functions.

In making these observations, however, I hope that I shall not be misunderstood, or taken in the extreme. It is very true

that the eye, even when much affected, and when acutely sensible of the irritation of air and day-light, may be permitted to remain without any covering, provided that the disorder is not absolutely dangerous, nor apparently of a protracted duration; but if it is necessary particularly to guard it against the painful glare of light, as well as from the cold or humid air, this may easily be done by means of a simple shade of green silk, fitted with a steel or brass spring, or hung with a rib-band, but so suspended in either case as not to press upon the eye, or entirely to prevent it from exercising its functions: and even the poorest patients, instead of silk, may avail themselves of a piece of green paper, of a proper and convenient degree of stiffness.

A very few years ago, I undertook the cure of a young man, who for more than six years preceding had suffered much from a schirrous inflammation of one eye, which was also covered over with consi-

derable tumours. The patient, as is always the case in complaints of such importance, could not support the light, its effects were so intensely painful; but this had arisen from his having sat in places almost excluded from light, with his head resting upon his hands.

The light, therefore, became daily more insupportable; and the exquisite sensibility of the eye was so much increased, that he at length shut himself up entirely in a darkened chamber; thus separating himself, in the very prime of existence, from all its natural and innocent delights. Such was the situation of this unfortunate youth, when his friends, less obstinate than others I have met with, brought him to me. It is needless to repeat the trouble it was necessary to undergo, and the patience requisite to be exercised, as well as the instances to be adduced, before I could persuade my patient faithfully to engage to perform that which was necessary on his own part to produce a cure; I mean

the gradual exposure of the eye to the influence of the atmosphere, and of the solar light, which, in fact, I considered as the first rational basis of his recovery. Having, at length, surmounted the various obstacles to this measure, the patient was soon astonished to find that the very thing which he had hitherto considered as the cause of his complaint, was actually, in a very few days, the cause of rapid relief, for he was radically cured in less than ten weeks, without adopting any other remedy than the making a gradual and moderate use of the organ, observing, at the same time, a cooling regimen, with some simple vegetable decoctions.

The third important rule is, that there is much general utility in bathing the eyes morning and evening, and also during the day, when they require it, in spring water, or in the purest and coolest that can be procured.

This, indeed, ought to be an universal rule, particularly in large cities, where the

quantity of dust is often the cause of repeated cases of ophthalmia.

With respect to this rule, it may be observed, that many only follow it in part, perhaps not at all. Others, again, observe it with a scrupulous exactness, whilst the greater number pursue a different plan. The first of these are sure to suffer for their negligence and slovenliness; indeed, I cannot conceive how it is possible for any people to endure the consequent inconvenience, when so little trouble is necessary for the mere bathing the eyes from time to time. At the same time I must confess, that a too frequent repetition of this salutary custom may take place, which is in itself hurtful, as it occasions a repeated compression, and also promotes too much the flow of serous matter from the organ.

The water used for this purpose ought always to be clear and cold, except in certain morbid cases of the organ, for which reason I would always give the preference to spring or river water: for if

the water is not pure, possesses any saline quality, or is even lukewarm, it usually has the effect of inflaming the eyes, of producing watery humours, and also of weakening the eyes with respect to their power of supporting the light. For this reason, pump water ought to be avoided; and the ablution ought to be performed not with a sponge,* but with a piece of fine linen, or the fingers. If done through the day, it ought solely to be when any dust or perspiration, or any thing unpleasant, has been introduced into the organ.

In dry and dusty or windy weather, this ablution is not only salutary but indispensable; but then it must never be done whilst the face is in a state of perspiration, which would produce the most fatal effects. It is for this reason, also, that it is dangerous to wash with cold water at the moment of rising, because that the insen-

* I do not object to the use of the sponge, or even of lukewarm water, in very simple cases, as shall be hereafter mentioned.

sible perspiration produced by the heat of the bed, and which is principally on the head, is considerably augmented at that moment, even although it is not immediately perceptible.

Some people think that they are rendering great service to their eyes by always bathing them in lukewarm water in an eye-glass, such as are made for the purpose. This, however, for purposes of mere ablution, is an abuse against which I have often spoken; indeed, I have often demonstrated to those who give way to this habit, by means of a thermometer, the extraordinary degree of heat which the coldest water will readily acquire, if only held to the eye for a few minutes.

It is a maxim, a long time established by experience, that although lukewarm baths are useful for the eyes in certain cases, yet they may be extremely hurtful in others. Let those, therefore, who now indulge indiscriminately in the practice, consider that they owe it to themselves to

lay aside these machines, except under specific advice, if they wish to preserve their eye-sight; and upon the same principle I recommend to all, that they will not even permit the linen dipped in cold water to remain too long upon the eyes.

One word more we must offer as to the indiscriminate use of eye lotions in general, whether their contents are known to us or not, as the diseases of the eye, even those of the simplest order, may arise from causes directly opposite—causes too which none but a judicious and observant oculist can clearly determine. It is evident that where the specific application of these remedies is rather matter of chance than of judgment, the patient runs at least an equal chance of adopting the wrong one—of applying an astringent where relaxation may be necessary, or a stimulant where he ought to chuse a sedative. This consideration ought to be decisive.

To which we may add, the lotions which are capable of being applied beneficially,

in one stage of a disease, may yet be very pernicious in another stage of the same disorder.

The same remedy also applied cold, or warm, may be salutary or noxious.

All lotions too which precipitate, when mixed with water, or rendered turbid, should be avoided, or at least used with the utmost care when necessary; because this turbid appearance is really the result of a chemical precipitation, the particles of which, though innoxious in solution, may thus act like the introduction of any common extraneous substances.

---

§ 2. *On the particular Care which ought to be taken of the Eyes during the Day, even whilst unemployed.*

It may seem incredible to some, that our habitations, their furniture, our cloathing, regimen, even the non-naturals (with other circumstances which it is sufficient

to hint at), should have a great influence on the organs of sight. It is, however, not the less true, notwithstanding the general incredulity upon those points, an incredulity which, from the negligence it produces, is too often the cause of incurable ophthalmies, and often of total blindness, particularly in advanced life.

If the too sudden transition from a dark apartment to the full glare of light is hurtful to the sight, at the moment of awaking, the same results from similar causes may be feared during the day, for which reason we ought to hold it as an important rule—

1*st*. *To choose the best lighted apartments whenever we sit down for a continuance, or where we make a forcible use of the eyes.*

Whoever neglects this advice runs the risk of being unable long to continue his employment, except with the loss of the best part of his visual faculty, which he will then in vain seek to re-establish.

Whatever injury, however, a person may receive from inhabiting a dark apartment, he will not be exposed to less, but to the contrary, if he adopts one where the windows look upon a whitened wall on which the sun's rays fall direct; a circumstance from whence the most obstinate inflammations often arise.* Of this,

---

* That reflected light, though less intense than the direct rays of the sun itself, is yet more hurtful to the eyes, has been long acknowledged as a fact by all writers on the subject.

The French philosophers have paid considerable attention to this branch of science; and some observations of *Bouguer* on this point may tend to confirm the propriety of the cautions in the text; particularly as the extreme simplicity of the Regimen and Cure for Optical Diseases, as detailed in the first edition of this work, has in one or two instances failed in affording conviction to those who are more influenced by the high-sounding promises of quackery than by plain rules, which, in a popular point of view, profess only to assist, and not to force the operations of nature.

That the quantity of rays reflected from a whitened wall, independent of the confusion produced upon

hereafter, I shall speak more particularly, when I treat of the *proper use* of the

---

the eye in consequence of the extreme irregularity with which they fall upon the retina, must be very great, is evident by a comparison with the reflection from the surface of water, which never appears so luminous, and yet has been proved by experiment to reflect the solar rays in great abundance.

It is deserving of notice, however, that water does not reflect the rays of light so forcibly at various angles; for Bouguer observes that the great difference between the quantity of light reflected from the surface of water at various angles of incidence is worthy of investigation, as when the ray falls nearly at right angles, or in a great angle of incidence, the reflection is not very great, whilst, at small angles, nearly three-fourths of the direct light is reflected; a proportion which must be much exceeded by a whitened wall.

Bouguer adds, that whoever has walked in still weather on the side of a lake opposite to the sun must have felt the force of this strong reflection; and he observes, that in this case the reflected light is equal to an half, a third, and sometimes to a greater proportion of the light that comes directly from the sun, and is, therefore, an addition to the direct solar rays that cannot fail to be very sensible.

visual organ, and shall only remark here, that every house on which the rays of the sun fall direct is preferable to one on which they are only reflected. Whichever way it may be, however, the one or the other always requires some specific modification; and to this I shall add, that we should always be particularly sedulous to have the window curtains carefully drawn up, that, when the doors or windows are opened for air, they may not fly

---

It ought also to be recollected, that all coloured objects absorb all or almost all the rays of light, except those whose reflection marks their colour, whilst a white wall scarcely absorbs any.

With respect to reflected light, it may also be added, that experimentalists have shewn, that although the direct light of the sun diminishes gradually as he approaches the horizon, yet the reflected light, at the same time, increases in quantity. Bouguer states, in this respect, that there is a certain altitude of the sun, in which the *united* forces of the direct and reflected light must be a *maximum*, or the greatest possible in combination; and that altitude he considers to be about twelve or thirteen degrees.

about from the pressure of the air, throwing the light from side to side, a circumstance even more hurtful than the direct rays of the sun itself.

The modern fashion of having the windows down to the floor is also not without some serious danger even for healthy eyes; for, the light being thus thrown up from below upon the sight, all the surrounding objects reflect a false light; and this is the more hurtful from its being of a nature different from the broad lights of open day.

If, indeed, I was forced to choose between a simple cottage, whose light was moderated through one homely casement, and a magnificent palace deprived of that advantage, my choice would soon be made in favour of that which should be most conducive to the preservation of the visual faculty.

Whoever finds himself obliged to direct his sight almost constantly to small objects, all lovers of natural history, all painters, and, in short, many artisans, both male

and female, will do well to choose a habitation from whence a long perspective of different objects may be viewed at intervals; for nothing is more proper than this to relax the contraction of the eye, and, as it were, to recreate it by the change.*

---

* On this point I may refer to the authority of Dr. Jurin, who, in some very curious observations on the changes which take place in the eye, in the progress towards old age, correspondent of course with those that proceed from artificial causes, states that the optical muscles, like all others in the human frame, acquire from habitude a power of contracting with more force, and also with more ease; whilst on the same principle, this power is lost where a disuse of their capabilities takes place.

At the same time he expressly asserts that the elastic parts of the optical organ will by degrees lose a portion of their elasticity, if kept too long in a state of tension; and, in like manner, will also grow stiff and difficult of distension, should they be seldom exercised.

Dr. Jurin considers these circumstances as quite sufficient to produce all those changes in the eye which appear to proceed from habit and custom; and he illustrates his opinion by observing, that all

With regard to furniture, if that in any case is more hurtful than salutary to the

---

persons, who are much accustomed to view remote objects, have a greater facility in distant vision than other people; applying his illustration to seamen, travellers, sportsmen, &c.

To this he adds, that persons who are accustomed to view objects at shorter, or at smaller distances, such as students, watchmakers, engravers, painters in miniature, &c. see better at those small distances than the rest of mankind; though at greater distances they cannot see so well as those who merely make the common use of their visual powers.

In the advice which I have given in the text, I considered it as applying generally to persons of all ages; but it may be material to observe, that an attentive observance of it is more applicable to the younger of both sexes employed in the professions alluded to; and this I recommend more particularly, in consequence of an important observation of Dr. Jurin, that as in children the pupil is generally more dilated than in grown persons, so he considers that fact as proceeding from the extreme flexibility of the cornea, which renders it easily to be bent, by its muscular ring, into any curvature required for seeing distinctly in reading, so that their pupil has less necessity for contracting in order for distinct

eyes, the evil falls principally upon the great and wealthy ; and it may be said to

---

vision : whereas, in grown persons, the cornea possesses such a greater degree of stiffness, that they are obliged to give a greater degree of contraction to the pupil. This, as I shall have future occasion to observe, is more noticeable in elderly persons, in whom the cornea grows still more rigid, rendering it difficult for them to read without spectacles, unless the print be very large, or unless the light be very strong, so as that *its stimulus shall cause a greater contraction of the pupil;* a circumstance by no means improbable, and which is deserving of notice by those artists whose profession it is to prepare artificial modes of improving or assisting the sight.

Dr. Priestly, who has availed himself much of Dr. Jurin's observations, in his very interesting work on optics, states, from his authority, a little experiment, easily tried, respecting the fact that elderly persons see better at a great distance than younger people. He says, let a person, whose sight for near objects is impaired by age, observe the moon at three or four days old, and take notice whether the illuminated part appears to be of a larger diameter than the dark part, and how much is the excess ; and let him recollect, if he can, what was the appearance of those two parts of the moon when he

be an indubitable fact, that gilded and brilliant ornaments of all kinds are the

---

was much younger. Jurin says that he was persuaded that the excess of the light part above the dark would in such case appear either to be none at all, or else much less, than formerly. This he stated to be his own case, as he well remembered that in his youth the diameter of the light part appeared to him much to exceed that of the dark part, though, at the time when he wrote, the limbs of the two parts seemed to his sight nearly to unite in the same circle, so that he concluded his cornea to be less susceptible of the stimulus of light than in his early youth.

To this I may add another fact, stated by Dr. Priestly, with respect to the effect produced on the human eye by the use of magnifiers, and by a close attention to minute objects; a fact which seems to shew that habitude, whilst giving an acquired facility, also diminishes the power, at least in process of time; for he observes, that Mr. Baker, an active member of the Royal Society, and who was famous both for his skill in microscopes, and for his extraordinary expertness in managing them, took the charge of examining some of the smallest globules for magnifying which had ever been made, and which were sent to the Royal Society by *Di Torre*,

frequent cause of painful affections of the sight, for which reason I shall offer, as a second rule,

That in all apartments in which we are accustomed to domesticate ourselves, there should be as little gilding as possible upon the ceilings or wainscots, or walls, or even upon the mirrors and picture frames;

---

of Naples, in the year 1765. Their size was extremely minute, for the largest had a diameter of only two points, Paris measure, and was stated by the maker to have the power of magnifying the diameter of any object 640 times; whilst the second was stated to be of the diameter of only one point, and to have a magnifying power equal to 2560.

Of these, however, Mr. Baker could make no use, as even with the one of smallest power he was not able to examine any object with satisfaction: and in his account of the experiment, he expresses a doubt that his eyes must have been injured by the experiment, unless the previous use he had made of microscopes had, in some measure, saved him from the ruinous consequences that must have attended others in the examination of them, adding, that he believed there were few persons who would not have been blinded by it.

also, that the doors and window shutters should be of some softened colour, whilst, that the various articles of furniture should also be rather of a brownish tinge than of a broad white.

In addition to this, I can scarcely believe it will be doubted, that the clothing, and, above all things, that of the head, must have a great influence upon the eyes. Indeed, whoever will pay the slightest attention to the revolutions in dress which our bodies are almost daily undergoing, must confess that the folly of fashion is too often detrimental to health.

Amongst the great number of the inventions of luxury, I mean of those particularly prejudicial to the sight, there are few, if any, which have more hurtful effects than the veils now used by the fair sex, which seem rather adopted for the purpose of exciting male curiosity than for any absolute convenience resulting from them. The continual vacillation of these gauzes or nets, thus intercepting objects

in a confused and partial manner, weakens the sight so much, that I frequently have under my care young persons, not more than seventeen or eighteen years of age, whose eyes were naturally very good, but who already complain of visual weakness, and are no longer able to execute any of those fine works with which they have been accustomed to amuse themselves.

Will these martyrs to fashion never be truly sensible of the injury they are thus doing to themselves? Ought they not, indeed, to perceive it in the ease and pleasure which they feel almost every moment in the very act of throwing their veil on one side, in order that they may be better able to see the objects which excite their curiosity? Yet the veil is still retained; and though some, by an experience almost too late, have been induced to correct their error, yet I fear there will always be too many of these gew-gaws, so pernicious to the visual faculty; as they are, unfortunately, now adopted even by the lowest

classes. Would to Heaven that my decree was strong enough, my words persuasive enough, to banish them all, without a possibility of their returning!

The third rule is, that it is always a matter of urgent necessity to preserve the eyes from a light too vivid.

For example, every hat or bonnet of any other colour than black, grey, blue, or green, and particularly when the inside or lining is smooth and shining, ought to be considered as an article of the most pernicious quality; for in the same manner as water, or the snow in the streets, reflects the light by a thousand different rays, so does this brilliant lining throw it down upon the pupil, where it causes more ravages than even the direct rays of the sun itself upon the weakest eye-sight.

Again—With respect to the fans which are still used by the ladies in summer, or at public places, can any thing be imagined more absurd or foolish, than an instrument whose object is to intercept the

rays of the sun, yet which receives those rays through every fold and opening; an instrument too, red, white, or yellow, worked in gold, in silver, in ivory, or mother of pearl, as if expressly fabricated for the ruin of the eyes! If these must be used, let them be of some utility at least; but then they must be green, blue, or grey, without either brilliancy or even transparency.

In general, with respect to the effect of our clothing upon the eyes, it is sufficiently proved,

That all clothing which is tight, or which particularly compresses any part of the body in such a manner as to interrupt a free circulation, always occasions a superabundant flow of humours to the head.

Any observer, possessed of common sense and common observation, must foresee, that those who wear tight clothes, and who are at the same time very sedentary, such as boarding-school girls, for ex-

ample, cannot remain long without some indisposition of the visual faculty; a foresight, indeed, proved by every day's experience: and if to this we add the effect of gross aliment, whether too rich or too highly seasoned, in which they may be indulged, is it wonderful if they arrive at a marriageable age with acrimony in their blood, which, hastening towards the eyes, produces an habitual inflammation? thus finishing what an improper custom has begun, and depriving them, even in early youth, of all those pleasures which are the consequences of a clear and perfect eye-sight.

The case will be the same with such of the sedentary of the other sex, as, in the indulgence of a silly vanity, are induced, during the exercise of the mind and the eyes, to wear clothes too nicely fitted, or a neckcloth too tightly arranged.

I have remarked already, at the commencement of this essay, that a healthy state of the eye-sight depends also much

upon the state of the atmosphere, whether natural or artificial, in which we are obliged to remain for any length of time. Indeed, I could here recount almost innumerable instances of the most pernicious effects, and of the various evils which an impure air has produced, even upon the strongest eyes. In short, I have, at all times, a number of patients suffering under the most obstinate inflammations, and which they always attribute to the exhalations of various kinds, to which they are exposed in the ordinary course of their existence.

It is a curious fact, and one which may be laid down as a fifth rule, that there is no vapour which acts more offensively upon the eye-sight than that arising from animal excretions.

The improvements in the police of our large towns, and also the modern arrangements round the habitations of our wealthy farmers, tend much to remove the causes of this particular evil: but still much alte-

ration is required; and it may be observed, that the principle on which this rule depends explains why the children sprung from very healthy parents shall often, and that very soon after birth, begin to suffer in their eyes.

Often, indeed, have my own eyes been witnesses of this species of ophthalmy, arising from the slothfulness of nurses, or of those employed in looking after the children, particularly where they throw dirty linen, and other articles of dress, into the corner of a chamber, or, perhaps, allow them to dry near a fire-place, particularly in the winter.

A schirrous inflammation of the eyes has of late become so frequent, particularly at Vienna, and in some other cities on the continent, amongst even very young children, as well as those more advanced in life, that at some periods it might almost be taken for an epidemy. In some places the medical people even went so far as to say that this proceeded from the use

of hard and indigestible aliments, and particularly from an excess in bread as an article of food, considering these things actually as the principal causes. But, after a very careful research, it was ascertained that the children of the most wealthy classes, who were not exposed to these particular predisposing causes, were yet not more exempt from the evil than those of the poorest individuals living in low, damp situations, and particularly the children of washerwomen, who, in the winter, were obliged to dry their linen within doors.

It was observable, however, that the children of the superior classes, who were attacked, were principally those who were, perhaps, predisposed to morbity by the delicate health of their parents, or by an over indulgence; but there were also many others, who, it appeared, had been pent up in confined nurseries, often placed in an improper part of the house: and here I may observe, that in all cases, even in

the largest apartments, if the children and their attendants are suffered to remain too long without having the windows opened, or if the beds are surrounded with thick curtains, then the unfortunate infants must always become victims to disorders of the eye of a similar nature.

It is evident, from repeated observations, that it is not the use of unwholesome aliments alone that causes inflammatory ophthalmia amongst children, but that these are more often the effect of the putrid exhalations in the places which they inhabit: and it is a fact not less certain, that the natural small-pox is principally destructive of life from the same reason, as it is invariably found that the disorder is most apt to affect such subjects; nay, I am convinced that it is not so much to the disease itself, as to the inflammation produced by such causes, that such frequent mortal consequences are attributable. It is then a maxim of the first importance, as a sixth rule,

That, to preserve the eyes in a healthy state, it is essential to breathe a pure air, and that a free and frequent use of general exposure to the atmosphere out of doors ought not to be neglected in any season of the year.

In order to comply with which rule it is necessary that all apartments in which children sleep, or reside, not only at home, but in schools, should be regularly aired, at least once a-day.

As a seventh observation, I find it necessary to point out that high winds, in dry weather, are particularly prejudicial to the eye-sight, on account of the dust which they put in motion.

To guard against the inconvenience attendant upon this, some people, particularly when travelling, make use of spectacles mounted in leather, or *goggles*, as they are sometimes termed, to preserve the eyes not only from the dust, but from the wind; and this they do without reflecting, that it is accompanied by another inconve-

nience, which is, that the eye being thus kept, as it were, in an air-bath, and the glasses soon becoming cloudy, the sight is not only obstructed, but the organ itself becomes susceptible of the common influence both of light and air, which may be augmented by other accidental causes; thus, perhaps, in a very short time, rendering this pretended preservative the actual cause of more injury than relief.

But a more safe and more efficacious means of relief from the inconvenience alluded to, particularly in travelling, may be readily found in the simple precaution of frequently washing the corners of the eyes with cold water, fresh from the spring if possible: and though this may appear too simple, it is not to be despised; for it not only removes the dust which may have been collected, but also destroys any symptoms of incipient inflammation. Yet it must be candidly acknowledged that cases may occur which will resist this remedy, particularly in high winds, during the heat

of summer; for then, no sooner does a person expose himself to their effects, than he feels a great dryness about the eyes, with some difficulty in opening and shutting them, and the eye-lids suddenly become so red, that a degree of inflammation generally ensues. In such cases, cold water is not alone sufficient; but certain relief will always be found in the application of a simple lotion, in the proportion of four ounces of rose-water (or a quarter of a pint,) with a drachm of gum arabic, and about fifteen drops of the acid of litharge of gold, or, in its stead, half a drachm of white vitriol, which may be further diluted, if the eyes are very tender. Such a remedy is of easy carriage, and may be renewed as often as thought necessary at a very small expense.

It may have been considered, perhaps, as a hasty assertion, when I observed, that our aliments, both of meat and drink, have great influence on the visual organs, but it is demonstrated by the most incon-

testible experience, which I shall lay down as an eighth rule—

That, by a repeated inattention to a proper regimen, we may not only incur a constant weakness of the sight, but even superinduce total blindness.

The rustic labourer eats what he can get; no aliment can hurt him: but the same food, if used by a sedentary person, whose head and eyes are always occupied in his employment, will soon be found to have a morbid effect. If, added to this, the latter should indulge in spirituous liquors, he will the sooner perceive a diminution of the visual faculty, accompanied with a constant flux of humours towards the head.

The cataract, a disorder so frequent amongst the Turks and other oriental nations, has generally been attributed to the use of rice as a principal article of food; but I am of opinion, that it is rather produced by the immoderate use of opium; for, if the former cause is the efficient one,

then blindness ought necessarily to be much more frequent in Italy, where rice is also much used.*

---

* The frequency of this complaint at the present day renders some more specific notice of it necessary, keeping clear, however, as much as possible, of mere scientific discussion. I may observe then that—

Cataract is simple or compound. The first is a mere opacity of the chrystalline lens itself, or of the capsule, or in the humours thence called interstitial; whilst the latter species is formed by an opacity of any two of these, nay sometimes of the whole three together.

In some instances cataracts are said to be hereditary; but, like Pandora's box, I can offer this comfort at the least, in perfect coincidence with the opinion of one of our most eminent oculists, that this complaint is very far from incurable. In fact, it may always be considered as within the power of successful operation as to its results, provided the functions of the organ itself are not positively deranged, and that no absolute organic injury has accompanied an accident.

Where cataract really has commenced, it will be improper to attempt the use of any of the, even approved, topical remedies applied in minor cases to

I have been assured by a friend that he has seen upwards of one hundred blind

---

the eye ; for it has been too well established by repeated experience, that these things, however innocent, if not useful in ordinary inflammations of the organ, are often extremely injurious in incipient cataract, with this additional disadvantage, that they render, when injudiciously applied, the operation for that complaint inexpedient, nay dangerous, until a considerable time after their adoption.

If topical remedies are hurtful in this case, so may I speak of internal ones, even to the extent of serious, and an unnecessary injury to the constitution, which in the case of cataract requires peculiar management.

It is expressly stated in the report of the Medical Committee of Inquiry into the new mode of practice, that the Egyptian opthalmia, being an acute inflammation of the conjunctiva, or thin inner membrane of the eye-lids, may be immediately stopped by such means as are employed to arrest other inflammations.

Medical men are already acquainted with several modes of accomplishing this object; and, however strange it may appear, there are some eminent practitioners, Sir William Adams among the rest, who place great dependance upon the effects of emetics in certain cases.

persons in the course of a forenoon, in the Dutch settlement of Cochin, on the Malabar coast, and that the greatest part of these unfortunate individuals have had evident marks of having suffered from a virulent small-pox; but at the same time

---

It is consoling too to know that the treatment of the chronic stage of the Egyptian opthalmia is simple in its principle, and so easy in execution, that any surgeon of ordinary education may be entrusted with it.

I profess not to discuss operations, or even to touch upon them, except where unavoidable; but here I may be permitted to offer a caution to my readers, before they determine upon the mode of cure, or even upon decisive treatment otherwise, except under the best advice. What I refer to is, the mistake that has more than once occurred, of believing cataract to be gutta serena. This is accounted for upon the principle that cataracts, as an eminent oculist has observed, differ as much in colour as in consistence. He adds, that they are met with of every shade or tinge, from extreme white to the darkest black of the pupil, which they then so nearly resemble as to lead to the error above stated.

he acknowledged, that the water used by the poorer inhabitants is of an unwholesome nature, producing numerous instances of elephantiasis, particularly in the legs, which are often swelled to double their natural diameter; whilst the richer and European population are entirely exempt from both disorders, which is supposed to be attributable to their using water that is brought upwards of forty miles from the interior.

I may also add, that the prodigious number of blind persons to be met with in most cities of Germany, but particularly at Vienna, is generally accounted for, by continental physicians, from the use, or rather the abuse, of sour wines, and of strong liquors, rendering the appearance of cataract very frequent amongst the lower classes.

In some respects, too, aliments which are merely hard of digestion may be extremely hurtful to the eyes, from their tendency to excite a degree of repletion,

which is soon sensibly felt by the tender organ; an effect, indeed, felt by all of sanguinary habits, who, *in particular cases*, after using food difficult of digestion, may perceive a kind of thick cloud, as it were, pass before their eyes, or a species of dazzling, if they are in a dark apartment.

The same effect will also be speedily felt by those who obstinately persist in any kind of labour which forces the eyes: this sensation too may remain with them a long time; and if any new cause should accidentally be joined with it, the health of the organs becomes seriously affected.

From these considerations, I would then lay it down as an important advice, forming the ninth rule,

That the bowels ought always to be kept in a soluble state; and that all extraordinary efforts to compel them to perform their office should be avoided, as the blood is always too rapidly impelled to the head by any pressure upon the intestines.

It is a tribute which literary people in general pay to health, or rather to disease, to suffer from intestinal complaints. Some find great relief by drinking a glass of cold water after breakfast, and another immediately after supper. Others, again, whose avocations admit of it, may use exercise on horseback; whilst some, if but slightly affected, receive great benefit from drinking mineral waters at their meals, or from the mechanical effects of friction on the abdomen. But there are sometimes cases which require a speedier remedy; cases which are, no doubt, the causes of frequent apoplexies at the present day, amongst the clergy, and other studious professions, and which ought to be immediately guarded against by emollient applications of a decoction of marsh-mallows and sage, or even by the injection of cold water; either of which are speedy preservatives against the effects of constipation, when time does not permit the application of cathartic medicines.

Respecting the preservation of the eyes, generally, there have been very minute particulars stated by early oculists; a few of which are not undeserving of notice in this place.

To adopt these rules, indeed, is impracticable to the various classes of society, to any extent, in the common affairs of life; yet where disease, or even weakness, of the eyes has begun to make its appearance, some attention to them may be found beneficial, in consonance with my own directions.

In regard to air, and its effects, it has been recommended to choose a situation where it is moderately dry and warm, avoiding all casual exposure to the external atmosphere, in rainy or thick misty weather. Marshes, fens, and even moors, are to be avoided; but where that cannot be readily done, then care must be taken to note the prevalent winds, and to choose a habitation to windward of the moist places. Southerly winds, however, must be guard-

ed against more than others, except when blowing over a dry soil, or from the sea.

In general, low rooms, and all situations incommoded with dust or smoke, are equally to be avoided. This too is simple, and well accords with my previous precautions.

It is not to be expected that people in good health will put themselves upon a preventive diet to preserve their eyes; but where disease makes its appearance, it is considered, as I have elsewhere noticed, that some care in the choice of food may be useful. Easiness of digestion is an important object in that choice; for which purpose I might readily select a list with full grown chickens, or young hens, partridge, pheasant, pigeons, &c.

In regard to vegetables, it is an old current opinion that soup, in which turnips or rape roots have been boiled, is beneficial.

Meat, boiled with fennel, mint, sage, and thyme, is recommended; but fried in butter must be avoided.

Fish is not considered good, though not absolutely pernicious; but milk, in many of its less digestible preparations, is forbidden.

In drink, no particular regimen except temperance is recommended. Wine, indeed, is said to be good, if not used so far as to make the patient *see double.*

It is needless to repeat the virtues ascribed to wine, or beer, made of eye-bright and fennel, by the old practitioners.

Bread, of a day or two old, as less disposed to flatulency, particularly when well-leavened and salted, is recommended for choice.

To eat little, but often, yet only when the stomach is clear, is a rule that may be easily attended to; and one which I certainly approve of. Sleep ought to be enough, yet in moderation; to be taken early, especially in summer, so as to rise soon after day-light, and to be avoided soon after a full meal. Even a recumbent posture ought then to be avoided;

also reading, but more particularly writing, or any sedentary occupation that causes the body to stoop or bend forward. Even exercise immediately after food, as promoting the rise of vapours from the stomach, is injurious.

Serenity of mind will always be found beneficial: if any passions are courted beyond that, they ought to be those of a cheerful kind, but avoiding immoderate laughter as much as grief or sorrow.

That some of these precautions, here recorded, may arise as much from prejudice or fancy as from experience, I am not prepared to deny; yet some of them do bear the stamp of truth in their internal evidence: and as they cannot be hurtful, where it may be convenient to try them, I thus offer them to the choice and consideration of my readers.

I may add, that a weak solution of the Belladonna, often recommended, certainly has the power of improving vision, in cases of partial opacity in the membranes, from

its power of dilating the pupil; but the experiment ought only to be tried under good advice, and even then ought to be considered as a temporary expedient, previous to the due performance of an operation.

---

§ 3. *Care of the Eyes in the Evening and during the Night.*

THERE are some people who take great pleasure in passing the dusk of the evening in comparative obscurity. If the eyes are unemployed, that may be permitted without doubt; but if any one attempts to make use of them particularly, either through necessity or an unpardonable vanity, he will do that which of all things is, perhaps, the most hurtful to the sight.

I shall enter more at large into this part of the subject as I advance; but here I shall notice that false economy which

often, through the impulse of sordid avarice, yet under the pretext of too much light being hurtful to the eyes, induces many persons to burn small candles, and those of a bad quality, provided they can get them cheap ; as if, in fact, they were in the last stage of indigence. These things, trifling as they may appear, must often come under the eye of a physician ; but it is a melancholy reflexion that people shall thus unnecessarily do that which often brings down upon them its own punishment in a partial, and sometimes absolute, destruction of the sight.

The first rule or observation to be noticed under this head is, that however prejudicial the glare of the sun-beams is to the eye, still as much so is darkness or obscurity, if it exists for any length of time.

In the evening, when lights are first suddenly brought into our apartments, we are apt to feel a painful sensation ; and if

at any time the eyes shall have been long unaccustomed to light, as may happen to prisoners in close and dark confinement, or to those who may have suffered for some time under a partial deprivation of the use of the organ, it is far from impossible that they may become at once totally blind. It follows, therefore, that this change should always take place with some degree of management at the first impression.

In the year 1795, I had occasion to perform an operation upon a patient sixty-five years of age, who had long been affected with a weakness of sight, approaching almost to total blindness. Although the place in which I performed the operation was very much darkened, yet with such acuteness did he feel the effect of the light immediately after, that he cried out with pain; and I was obliged to treat him like a person blind from infancy, and was indeed forced to use extraordinary discretion in accustoming him gradually

to the influx of day-light.* Even four months after the operation, he found it im-

* It appears almost self-evident, that a series of observations made on those whose sight is recovered by surgical means, might tend much, not only to the investigation of the philosophy of optics, but also to the adoption of means for the preservation of the visual faculty; yet, unfortunately, very few cases of this nature are on record—so few, indeed, that even our Encyclopædias universally adduce that interesting case stated upwards of half a century ago, in Cheselden's work on anatomy.

Many of my readers may have seen that detail; but as there may be others to whom it cannot fail of being illustrative of many points in this work, I shall observe, that in the case alluded to the patient was born blind, thereby affording much philosophical interest; at the same time it is worthy of remark that, perhaps, more interesting and useful information might be drawn from clear statements of the cures of those who, having possessed the visual faculty even to manhood, had lost it for a time through some ophthalmic disorder, and afterwards recovered it by surgical operation.

In the case alluded to, the cause of blindness was a cataract, which never produces cold opacity, but

possible to go through the streets without a guide; and yet at home, in a place par-

---

permits the patient to distinguish day from night; nay, in a strong light, to distinguish some of the colours, such as scarlet and black, or white, though the shape of the objects cannot be ascertained.

This is explained upon the principle of the light being permitted by the cataract to enter obliquely through the aqueous humor, or the interior surface of the chrystalline (though the rays cannot be brought to a focus upon the retina), so that objects are merely discerned in such a manner as they would appear to a sound eye if seen through a glass of broken jelly, in which the light would be refracted by the great variety of surfaces so differently, that the eye could not possibly collect all the divergent rays, nor even a sufficient number of them into the proper focus. This sufficiently explains why the colour, though not the precise shape, of an object, may be distinguished by unfortunate persons labouring under the same disorder as the patient described by Cheselden, who, though capable of knowing those specified colours in a good light, previous to the operation, was yet unable to distinguish them afterwards, when he first saw them there, in consequence, evidently, of the very faint ideas he had been able to form of them.

tially enlightened, he was enabled to read the smallest print.

It is stated that he thought *scarlet* the most beautiful of all colours, and that he ranked the pleasure he derived from the others in proportion to their brilliancy and gaiety. The first time, indeed, that he saw black, it excited the greatest uneasiness in his mind, as if there was some intrinsic idea absolutely proceeding from this colour, and thus pointing out that certain colours have been adopted for the purpose of expressing certain ideas, instead of those ideas being implanted in the mind by association. Besides, it is well known, that an intelligent blind man once compared his idea of scarlet to the sound of a trumpet; and from some such idea it was that Cheselden's patient could not, for some time, be reconciled to the colour of black: nay, after he was in some measure accustomed to it, he was struck with the utmost horror at the accidental sight of a negro woman.

Though not precisely connected with the point to be illustrated, it may be added, that when he first was able to see he was so incapable of judging of distances, that all objects appeared to touch his eyes in the same manner as they did his hand when grasped; it is not surprising, therefore, that smooth and regular forms should be most pleasing to his

But not to insist further on extremes, I may remark, that the pain felt in passing

---

sight, although he literally knew not the shape of any thing, nor even one thing from another, however different in form or magnitude. In short, he was for a long time obliged to trust to feeling, in order to assist the visual faculty; insomuch that even the dog and cat appeared to him to be similar objects, until he had assisted his vision by a careful examination of them with his fingers.

It was also to him a matter of great surprise, that those persons, or things, whom he had loved most in a state of darkness, were not the most agreeable to his sight; and his disappointment at finding that those persons best beloved were not the handsomest, was productive of several amusing incidents. Even portraits for some months appeared to him to be only parti-coloured planes, and when he fully understood their intention, his surprise was even greater at not finding them to possess that rotundity which they appeared to assume.

That his surprise should be great at being shewn his father's portrait drawn on a locket, which his mother wore at her watch, is not extraordinary, any more than his observation, on ascertaining the resemblance, that the thing seemed as impossible to him as that a bushel of any substance should be put

from obscurity to light has nothing particularly analogous in adopting its contrary:

---

into a pint; but I may particularly close this note with a fact illustrative of some of my admonitions, that at first he could bear very little light, and thought every thing to be extremely large; and it was only upon surveying things that were larger, that he could conceive the first to be less, not having as yet any faculty of forming abstract or *remembered* ideas of lines or limits beyond the bounds immediately presented to his visual powers. Even though he knew the apartment in which he sat to be but part of the house, yet he could have no idea of the house appearing to be larger than it.

Before couching, he appeared to have no hopes or wishes of advantage from the operation; a circumstance which I have noticed even in the most intelligent blind people, some of whom have rather expressed a low opinion of the powers of sight, and a degree of apathy with respect to any proposed cure.

Another fact, which will illustrate some of the succeeding observations, was, that when he underwent the operation of couching in his second eye, he observed that objects at first appeared large to that eye, though not so large as they had done to the other: again, when he looked upon the same

yet, even then, we feel a partial blindness until that the pupil has dilated itself so as to be able to discern obscurer objects.* One may judge from all this how

object with both eyes, he thought it looked twice as large as with one only; yet it is expressly stated that it was not discovered that objects appeared to him at any time to be *double!* a fact on which the learned Dr. Reid has laid great stress in his attempt to shew that there is no foundation for the assertion of some philosophers, that objects appear double at first to all men, and that it is only by a ready association of ideas, in consequence of much experience, that we are enabled to ascertain the singleness of any object, whilst there is a distinct picture of it in each eye.

* That some persons can do with much less light than others, is an observation worthy of notice; we are not, therefore, to strain our visual faculties in any case, because we see others can do it. Some instances of this power have been given of an extreme and rather extraordinary kind, particularly by an Italian writer, who records the fact of a person at Pisa being able to see very well in the night, though he was almost blind in the day-time; but to this I may add, that cases of the opposite extreme are infinitely more common, particularly with re-

dangerous is that ill-understood economy which only permits the use of one candle

---

spect to patients suffering under that very extraordinary disorder, called "Nyctolopia," by which, though they see extremely well in the day, they become so completely blind on the approach of evening as to be totally incapable of conducting themselves. This complaint is principally, indeed, confined to tropical climates, and evidently proceeds, in a great measure, from relaxation, and partly, perhaps, from exposure to the moon-beams whilst sleeping, a fact particularly noticed by medical men who have had the care of such patients, both in the East and West Indies.

I know not what credence is to be given to some accounts which state that the *lusi naturæ*, or white people, born amongst the African negroes, and also some of the Indian tribes on the Isthmus of Darien, have a greater facility of sight in the dark than when exposed to day-light. These people have been called "Moon-eyed;" and Dr. Priestley attempts to account for the circumstance by the probability of their choroides being of a white or light coloured texture, and not dark, as in all others of the human species, in like manner as cats, bats, and other nocturnal animals; but he confesses that he never met with any account of *ocular* dissections of

in a chamber. Hence the eyes accustom themselves insensibly, particularly during the long winter evenings, to a large space badly lighted; and thus to a degree of obscurity, which on the next morning is strongly contrasted by the glare of day. In the winter too this is the more dangerous, because, if the streets are covered with snow, the effect of the reflection may be of the most pernicious tendency.

Indeed, Nature herself speaks volumes on this subject, in the approach and departure of light,* which are always so

---

these people, and it is possible that the real state of the case is by no means so extreme as travellers, fond of wonders, have recorded it to be.

* It may be observed, that where economy, or any other cause, makes a saving of light necessary, or requires a diminution of a *number of lights*, a partial improvement may be made by a discovery of the late ingenius Dr. Franklin, who ascertained that the flames of two candles, when joined, gave a much stronger light than when they were separate. This he proved by the simple experiment of a person holding the two candles near to his face, first apart,

gradual, and yet so varied, as never to be long in extremes; it only remains for me,

---

and then joined nearly in one: immediately upon the junction his face appeared to be much more strongly illuminated than it was previously.

The cause of this is supposed by Dr. Priestley to be, that the union of the two flames produces a greater degree of heat, and that this causes a further attenuation of the vapour, and consequently a more copious emission of the particles of which light consists—a fact which, if correct, may be perfectly compatible with the strictest economy, as it may exist without producing a more rapid consumption of the matter of which the candles are formed.

This, indeed, is further corroborated by an observation of Dr. Priestley, on a point which any person may ascertain, and which is, that the lowest part of candle flame is always blue; and when the flame is sufficiently enlarged, so as just to be ready to smoke, the top is always red. On this he puts the question, "Doth not this strengthen the conjecture that red light consists of larger particles than blue? for next to the red particles are those of the *gross vapour which is not ignited.*"

It is also deserving of caution, that where the eye is accustomed to a strong artificial light during the evening, it ought not to be sedulously occupied

therefore, to point out the propriety of every person, who can afford it, having a

---

immediately afterwards where there is less light; nor should either the artisan or the student adopt a habit of rapidly changing his quantity of artificial light; as it has been particularly noticed by the French opticians, that when a person stands in a place, where there is a strong light, he cannot distinguish objects that are placed in the shade, nor can he see any thing upon going immediately into a place where there is very little light. This, indeed, is noticeable by every person; and the inference drawn from it is, that the action of a strong light upon the eye, and also the impression which it leaves upon it, makes it insensible to the effect of a weaker light.

A repetition of this must, therefore, in some measure, give to the eye a morbid habitude, so as to make it incapable of adapting itself to changes which cannot be avoided, in consequence of the elasticity of the muscles, perhaps of the nerves also, being diminished; for, that the variations in artificial light, or between it and comparative darkness, are extreme, is proved by an experiment of a French philosopher, who had the curiosity to endeavour to ascertain the proportion between the intensities of two lights upon this principle.

night-lamp in their chambers, so that the eyes should never, for a single instant, be deprived of the effects of light, even though small. To have a good lamp, however, two qualities are absolutely necessary, without which it would be productive of more injury than relief, and

---

For this purpose he threw the light of two equal candles upon a board, and found that the shadow produced by intercepting the light of one of them could not be perceived by his eye upon the place enlightened by the other, at little more than eight times the distance of the lights from the reflecting surface; from whence he concluded that when one light is eight times eight, or sixty-four times less than another, its presence or absence will not produce any effect upon the eye whilst that is stimulated by the greater light; wherefore, it is almost self-evident, that repeated and sudden contractions and expansions of the optic organ, in order to accommodate itself to such extremes, must be pernicious in the same manner as the eye is affected by the vivid glare of lightning, or, in a humbler way, is dazzled and confounded by the sudden glare of a lantern in a dark night.

might endanger the sight during repose more than the obscurity of night.

The first quality is, that the lamp should be so constructed as in all cases to prevent the flame from striking direct upon the eyes; and the second is, that it shall not produce a filthy, greasy smoke in the apartment, an inconvenience almost inseparable from the common oil lamps.

Of all species of night-lights, the preference ought certainly to be given to candles of pure white wax, of a sufficient size, and fitted with small wicks. These ought to be placed in a lamp of alabaster, or flint glass ground so as to be deprived of a great part of its transparency; but, as there are so many who cannot afford such expensive arrangements, it is easy to point out a cheaper mode, and one which will answer every purpose of a good night-lamp.

Take a common beer glass, or tumbler, about one-third full of fine sand, which must then be wetted into a humid mass;

with the water, when it is settled, rising about the twentieth of an inch above the sand. The glass must then be filled up with melted hog's lard; and when that is congealed a wick must be introduced, dipped in wax, and fitted to a slender slip of wood, in order to keep it extended.

The second rule to be adhered to under the present head is,

That sleep has a most important influence over the sanative state of the visual faculty.

We see that every member of the human body, when accustomed to a moderate exercise, becomes always stronger, and is better adapted to the functions for which it was originally designed. From this we may infer, that sleep too long protracted, like an entire abandonment of the use of sight, must, comparatively, be hurtful, particularly if persisted in for any length of time. This must have offered itself to every person's observation, who, having

changed his usual mode of sleeping, shall also feel himself heated by the luxury of a down, or even an easier feather bed.

In such a case the eyes always become weak and inflamed, and do not suffer less than the other faculties of the head.

Here it may, perhaps, be asked, if it is good for the eyes that we should sleep but little; to which I would answer, that there are cases in which we do not sacrifice sufficiently to the somnolent deity. Indeed, I could adduce many unpleasant cases, not only amongst the *laborious* of all classes, but also amongst those who lead irregular lives. In short, I could cite instances of numberless well-meaning people, who, sacrificing the health of their eyes to what they esteem the duties of their situation, or to what they falsely imagine the good of their families, think that night labour cannot hurt their eyes; alleging that they have often passed many nights without feeling any inconvenience: and it is also well known that many literary people,

who have been in the habit of giving up to the pen that time which ought to have been dedicated to repose, have repeated their errors so often, that at length, though generally too late, they have found a serious, and too often an irreparable, injury done to the organ, and one which called for a much greater degree of relaxation, and consequent inactivity, than otherwise would have been required.

CHAPTER II.

On the moderate Use of the Eyes in general.

INASMUCH as a prudent use of the sight is salutary, so is an entire state of inaction pernicious to it; and of this there is the most incontestible proof in the case of the near-sighted and the squint-eyed.* He

* It is too frequently the case, in a popular point of view, that the most efficacious medicines are neglected in consequence of their apparent sim-

who squints sees all objects double: and it is believed, in general, that it is only a

---

plicity. All cautions and advice of the same kind are exposed to the same fate, even though the ablest physicians should be in favour of the simple means, and in opposition to the absurd compounds of advertising quacks. In order, however, to give more weight to the simple remedy, which, in the text, I have proposed for the cure of Squinting, I shall add some observations in accordance with it, drawn from other sources, and which, I trust, will have the effect of calling more attention to the process alluded to.

It has been observed by Priestley, that this affection of the eyes has produced great contrariety of opinion amongst philosophers; and he seems to think that the most sensible account of this defect in vision is that given by Dr. Jurin already mentioned; who says, that when we look directly forward at a distant object, then the pupil of each eye lies in the middle of the aperture, formed by the eye-lids. In looking at near objects the distance between the pupils is something less, but still it is always the same in all oblique directions of the eyes, or when we look straight forward, by which means the axis of both eyes are directed towards the same point in both these cases, if looking at distant and near ob-

bad habit, because that, with time, he begins to regard the objects around simply

---

jects. But in those who squint, when the pupil of the undisturbed eye is seated in the middle of the aperture, as in looking directly forward, the pupil of the other eye is generally drawn close to the nose, and consequently the distance between the two pupils continues the same in all oblique directions of the eyes, so that the two axis are never pointed to the same object, though the muscles do so far act in concert with each other, as to move both eyes the same way at the same instant of time.

Dr. Jurin adds, that this vicious habit may easily be contracted by a child, if he is often laid into his cradle in such a position as to be able to see either the light, or any other remarkable object, with one eye only; and when, by this means, he is brought to squint, and the habit is confirmed, he apprehended that it would be in vain to attempt to cure him by his wearing tubes, or shells with small holes in them to look through, which, it appears, had in former times been the practice.

The method of cure which he proposes as the true one, is, that when the child is arrived at such an age as to be capable of observing directions, he is then to be placed directly before the operator, who directs him to close the undistorted eye, and to look

as they exist, and no person, not even the squinter himself, thinks that he sees ob-

---

at him with the other. When you find the axis of this eye fixed directly upon you, says the Doctor, bid him endeavour to keep it in that situation, and to open his other eye. You will now see the distorted eye turn away from you towards his nose, and the axis of the other eye will be pointed towards you; but with patience and repeated trials he will, by degrees, be able to keep his distorted eye fixed upon you, at least for some little time, after the other is opened; and when you have brought him to keep the axis of both eyes fixed upon you, as you stand directly before him, it will be time to change his posture, and to set him first a little to one side of you, and then to the other, and then to practise the same thing: when, in all those situations, he can perfectly and readily turn the axis of both eyes towards you, the cure is effected.

For the satisfaction of grown-up persons, Dr. Jurin adds, that they need not despair of a cure, but may practise all this by a glass, without a director, though not so easily as with one; but then, the older the patient is, the more practice will be necessary.

Another writer, Monsieur Buffon, considers the affection of squinting to arise merely from an ine-

jects but with one eye, when he sees them naturally. If we examine with attention

---

quality in the goodness of the eyes; but an important and consolatory observation of his must not be passed over, which is, that in some cases the eyes have what is called a cast, only in consequence of the optic angle being too great or too small, even when they are of equal goodness. This he supposes to be generally the result of habit, acquired very early, in consequence of the mismanagement of children, and which is often easily cured. He says, that if the eye that squints be turned towards the temples, he has generally found that there is no great inequality in the goodness of the two, and that in this case, the cause being only a vicious habit, the cure has been completed by covering the good eye for a fortnight only.

In the investigation of some other theories of squinting, Dr. Priestley very aptly observes, that the circumstances which appeared to him to occasion squinting in young children, agreed well with the above theory; thus, if a child be laid so in his cradle as that one eye shall be covered, the external influences of light cannot operate upon it; and if this be often repeated, especially while the association, which confirms the congruity of the motions of the eyes, is weak, the eye which is covered will

the visual mode of the squinter, wo shall find that he, at the commencement of his indisposition, always closes the affected eye in order to fix it; so that in a short time, neglecting the use of it more and more, it loses its faculties completely by this constant inaction, in such a manner, that the unfortunate individual may be considered as one-eyed.

The discovery which I have made of this paralysis of the eye, for I know not what other name to give it, has arisen from the attentive observations which I have made with numberless patients whom this complaint has been troublesome to, and who have come to me for relief. This I have, in most cases, been enabled to afford by the simple process of binding up the sound eye every day for a couple of hours, in order to oblige the patient to make use of the debilitated organ, and,

obey the influences which descend from the brain, and turn upwards and inwards for the most part.

according as it was more or less indisposed, to keep the other more or less veiled; continuing the operations until the unsound eye could fully perform its functions.

By these simple means I have frequently had the satisfaction of curing this unpleasant weakness, not only in children, but in subjects of more advanced life; particularly in those cases where the complaint had arisen solely from bad habits.

Generally speaking, we may remark, with respect to all cases of this nature, that one eye, and, for the most part, the right one is more piercing, stronger, and can support a greater degree of tension, than the left.* In fact, I know different

* Even where the eyes are apparently of equal goodness, there is an extraordinary difference between the proportion of their united forces and that of one eye only: a fact which has been clearly proved by a very curious experiment of Dr. Jurin, who was anxious to ascertain whether an object, seen by both eyes, appears brighter than when seen

people who with one eye cannot read ordinary sized print at the distance of seven

---

with one eye only. For this purpose he laid a slip of clean white paper directly before him on a table, and applying the edge of a book close to his right temple, so as that the book was advanced considerably more forward than his face, he held it in such a manner as to hide from his right eye that half of the paper which lay to his right hand, while the left half of the paper was seen by both eyes without any impediment; then looking at the paper with both eyes, he observed it to be divided from the top to the bottom by a dark line, and the part which was seen with one eye only was manifestly darker than that which was seen with both eyes; and applying the book to his left temple he judged from the result of his experiment that both his eyes were of equal goodness. He then endeavoured to ascertain to what degree this excess of brightness amounted, and comparing it with the appearance of an object illuminated partly by one candle and partly by two, he was surprised to find that an object seen with both eyes is by no means twice as luminous as when it is seen with one only; and after a number of experiments by which he made the proportion less and less continually, he found that when one paper was illuminated by a candle placed at the

or eight inches, whilst with the other they can read at a much greater distance; and

---

distance of three feet, and another paper by the same candle at the same distance, and by another candle at the distance of eleven feet, the former seen by both eyes, and the latter with one eye only, appeared to be of equal brightness, so that an object seen with both eyes appears brighter than when it is seen with one, only by about a thirteenth part.

Dr. Jurin next tried some experiments to discover whether an object seen with both eyes appears larger than when seen with one only; but he concluded that it did not, except on account of some particular circumstances, connected with artificial vision.

The equal goodness of Dr. Jurin's eyes is, however, only one exception to a general rule; as Buffon, from a number of observations, ascertained that there is very often an inequality in the goodness, and in the limits of distinct vision of the two eyes of an individual; and he ascertained that when one of the eyes is much weaker than the other, then the person does not direct it towards the object, but makes use of the stronger eye only, as most people make use of the right one in preference to the left.

Though, when both eyes are equally good, we

this is, doubtless, the reason why the near-sighted, when they wish clearly to discern

---

see, according to Dr. Jurin's experiment, more distinctly with both eyes than with one only, by about one thirteenth part; yet, when the eyes are unequal in goodness, objects appear less distinct with both eyes than with one, a fact which particularly applies to a caution which is given in a succeeding page, respecting the adapting of spectacle glasses to each eye: for if, for instance, the distance at which a person can read a small print be from eight to twenty inches with the stronger eye, but only from eight to fifteen with the other, then distinct vision will be limited to seven inches, or from eight to fifteen for both eyes; and it is added by Dr. Priestley, that as the image in the good eye will be stronger than that in the weak one, so the impression upon both will not be so distinct, as if the good eye only had been used. It is no wonder, therefore, that persons in such a predicament choose to make use of one eye only, and turn the other aside, so as actually to produce squinting even in adult patients.

That such evident inequality does often exist, and ought to be remedied as soon as possible, is also certain from the observations of Dr. Reid, who, in examining a number of persons who squinted, found

objects far removed, always shut the weakest eye; but to examine nearer objects always close the better.

---

in all of them a defect in the sight of one eye. Some of them had only so much of distinct vision in the weak eye, as to be able to read with it while the other was covered; and others saw nothing at all distinctly with one of the eyes, whilst the other possessed all requisite powers.

We may here add the authority of Buffon, that a weak eye acquires strength by exercise, and that many persons, whose squinting he had thought to be incurable on account of the great inequality in the goodness of the eyes, having covered their good eye for a few minutes only, and consequently being obliged to use their bad eye for that short time, were themselves surprised at the strength it had acquired; so that measuring their view afterwards, he found it more extended, and judged the squinting to be curable.

It may be of importance, from time to time, to try the equal goodness of each eye; as it is positively stated, by several good authorities, that there have been many cases of persons being even blind, totally blind of one eye, and that for a considerable period, without having perceived it.

This may, indeed, be considered as incredible:

Near-sightedness is, doubtless, in many cases, produced by the original conforma-

---

yet the ingenious Dr. Porterfield has thought it not unworthy of particular notice, saying that the most universal, and frequently the most certain, means of judging of the distance of objects, is by the angle formed by the optic axis; for our *two* eyes, he observes, are like two different stations, by the assistance of which distances are taken, as in a trigonometrical survey.

This, he adds, is the reason why persons who are blind of one eye so frequently miss their mark in pouring liquor into a glass, in snuffing a candle, and in such other actions as require the distance to be accurately distinguished.

In order to convince ourselves of the usefulness of this method of judging of the distance of various objects, he proposes the simple experiment of suspending a ring by a thread, so that its side may be turned towards us, and the hole in it to the right and left hand, or, in other words, that we look at it edgeways. If we then take a small rod, bent at the end, and retire from the ring only a few paces, covering one of the eyes with the hand, we may think it very easy to pass the bent end of the rod through the ring, yet, perhaps, upon trial,

tion of the eye in infancy; but it is also to be considered as a disease of more advanced years, often making its first appearance between twelve and eighteen years of age; as I shall hereafter demonstrate and account for.

The remedy for this, by means of a glass, every one is acquainted with; but it is not so generally remarked, that these glasses are never used, except by individuals who can spare time to use them; whence it has been very judiciously inferred that the lower classes, sometimes at least, overcome the complaint by abstaining from artificial relief.

In near-sightedness it is better to do without a glass, than to be forced soon

---

particularly if done quickly, we shall not be able to succeed above once in a hundred times.

This use of the optic angle is not supposed, however, to extend to distances beyond 120 feet, as the angle then becomes too small to be distinguished by the mind.

after to adopt a second of greater concavity; which is the frequent result of hasty adoption of artificial relief.

This is exemplified by the fact, that amongst those who use a concave glass, it is found that the complaint increases in the right eye, as that generally employed.

Spectacles will therefore be safer than a single glass; but the safest way is to avoid the use of glasses as long as possible: as the real want of them can never be so injurious as their injudicious adoption.

Another reason for the non-adoption of glasses in an early stage is, that near-sightedness does not always proceed from the greater or less convexity of the eye, or of any of its parts, but from a want of transparency; as is particularly the case with children.

I must add, also, that another cause may exist in the conformation of the organ, in the distance of the outer surface, or of the chrystalline, from the retina, not

being always proportioned to its natural state of convexity.

These are the actual causes; but a morbid affection may arise also from the spherical figure of the cornea approaching towards a conical shape.

Where the near-sightedness really proceeds from a morbid change of shape, arising from general debility, accompanied with a preternatural thinness of the cornea, then general and topical tonics may be applied with success, but still under professional advice. It is also a remarkable fact that persons attacked with near-sightedness in apparent good health, have been cured of it during a violent fit of illness. A very curious case of this kind is mentioned in the last publication of Mr. Ware's papers.

If, indeed, we pay but a little attention to short-sightedness in general, we shall see that every individual affected with it employs only one eye when he reads without spectacles; many even make use

of only one glass, keeping the other eye shut until it becomes seriously weakened by this state of inaction.

This is a circumstance from which those who squint are exempted: but it is also the reason why so many of the near-sighted become squinters at a more advanced period of life; because that one of the eyes, thus entirely neglected and inactive, no longer follows the various movements connected with the exercise of the visual faculty, and thus remains for a long time fixed in one direction. Nay, I have frequently seen, even amongst those who use double eye-glasses, that it is one eye only which is called on to perform the visual function, and that, without knowing it, they become almost blind of one organ. This arises solely from both glasses being fitted for the same focus, whilst almost all men, but principally the near-sighted, have different points of view, and even different *axis of vision* in their two eyes; from whence we draw this inference, that

all those who use eye-glasses, or spectacles, ought to select such as answer both eyes, since that *lens* which is adapted to the visual faculty of one eye may not be so for the other, thereby rendering one of them totally useless, in consequence of being thus deprived of its proper exercise; an evil which can only be cured by the means already recited, but which may be avoided by a judicious selection of glasses.

After these preliminary and experimental observations, it must be totally unnecessary to adduce further proofs of how salutary and essential it is to the preservation of the visual faculty, that its use should be properly regulated and *moderated* according to contingencies.

Of the rules necessary with respect to this part of the subject, the first is,

That we ought never to exact too much from the sight, however good and durable it may appear to be.

Unfortunately, however, there are but few who have any consideration of the

necessity of a wise economy of the visual faculty; and I have seen many instances of young persons of the best promise who, merely from a neglect of this consideration, have actually become totally incapable of any kind of daily employment, which requires much exercise of the eye-sight.

I may here be asked what are the first symptoms that ought to be considered as giving a warning of an improper use having been made of the visual organ, and of a certain species of relaxation being necessary for it? a question the more necessary, as we know that the constitution of each individual differs sensibly, and also that the goodness and strength of the eyes often depend upon the sound state of the other organs of the body, insomuch that one person may employ himself for whole days in the contemplation of objects, which ought only to be looked at through a magnifying lens, whilst another will complain of the tension of the sight if used thus merely for half an hour. The

most certain signs, then, which ought to prompt us to a wise economy of the sight, are as follow:—

1. *When the focus of sight, commonly called the "point of view, or point of distinct vision," begins to approach nearer to the eye, insomuch, that we feel obliged to bring objects closer to it than usual, in order to discern them correctly.*

This change of the point of sight happens often so suddenly, and in a manner so apparent, that after a powerful contraction of the eye for some days only, particularly if the *evenings* are *added*, a person will unavoidably find himself obliged to bring small objects nearer to his eyes.

2. *When we feel sometimes, particularly during any intense labour which demands a close application of the organ, a painful contraction throughout the whole orbit of the eye; which disappears readily, however, after giving ourselves even a quarter of an hour's relaxation, or by closing the eye-lids from time to time.*

3. *If the labour is of long duration; or if it exacts not only a considerable tension of the sight, but also an ardent application of the mind; then the before-mentioned contraction is generally followed by a sensation of heat in the eye-lids, accompanied by a heaviness, and a difficulty of opening them, and even of moving the pupils themselves.*

4. *If sometimes during labour or occupation, and when one wishes to look steadily at a distant object, the eyes begin to discharge watery humours involuntarily, or at least to become more humid than usual.*

5. *If during the hours of occupation, or soon after, we experience a slight pain in the head, and an oppression like that of a weight on the eye-lids.*

6. *If in young people, very fair, and of a sanguine complexion, the borders of the eye-lids become red, or thicker in some manner than when in perfect health, and if the blood vessels become visibly turgid.*

7. *In short, if we perceive, from time to time, a slight cloud pass before the eyes; or if objects become indistinct for some moments, obliging us to shut the eyes, to avoid the consequent numbness, or apparent debility of the organ; a sensation which is soonest felt by young persons, fair and sanguine, after making an injudicious use of their visual faculty.*

Whoever, then, will despise the warning of any of these symptoms, and who shall be inconsiderate enough to think that he can with impunity go on to abuse the noblest of the human organs, let him tremble at the approach of two symptoms, which will not be long in shewing themselves—

8. *Particularly when objects shall appear surrounded by a faint cloud or mist, whose extremities shall be tinged with the colours of the rainbow.**

---

* That such a sensation arises from a morbid sensibility of the organ, often produced by an improper use of the eyes, is proved by an observation of the

9. *And when objects shall begin to dance before the eyes, which are all at once*

---

famous Descartes, who, reflecting on the coloured circles which sometimes appear round the flame of a candle, and which had been supposed to be similar to *Halos*, thinks they are truly to be ascribed to some morbid affection from natural or artificial causes.

He deduced this opinion from a circumstance which took place respecting himself; for, when (after leaning his head for a considerable time upon his hand, during which period his right eye had been closed, and with his left he had been looking towards the heavens), a candle was brought to him, and he looked upon it with both eyes, he saw two circles round the flame, consisting of colours as vivid as ever he had noticed in the rainbow. The largest was red without, and blue within; and the smaller was red without, and white within, extending quite to the flame. Upon closing his right eye, both these circles vanished; but upon opening it again, and closing his left eye, they appeared as before. The conclusion he drew from this occurrence was, that it was produced by the state into which his right eye had been brought, by keeping it pressed with his hand; but why, he did not attempt to explain.

*covered with an insupportable degree of obscurity, whilst the objects themselves, sometimes apparently raised, then depressed, often topsey-turvey, shall appear as if floating at random.**

---

* That the seeing of objects *reversed,* does not always depend upon a morbid state of the eye, but may sometimes arise from peculiar circumstances, is to be admitted, having been ascertained by a curious experiment, in which the late ingenious philosophic Grey took a stiff piece of brown paper, and pricking a small hole in it, he held it at a small distance before him; when applying a needle to his eye, he was surprised to see the point of it inverted. The nearer the needle was to the hole, the more it was magnified, but the less distinct; and when it was so held, as that its image was near the edge of the hole, its point seemed crooked. From these phenomena, he concluded that these small holes, or else the air within them, produce the effects of concave specula, and he even gave them the name of aërial speculums.

The anatomical fact is, indeed, that the representation of all objects upon the retina, or mirror of the eye, is reversed, though the mind perceives the object in a different position. Much controversy

Although it may be improper absolutely to call this a disorder, since it is, perhaps,

---

has taken place upon this subject; but, perhaps, the most rational explanation of it is that which says that when the parts of a distinct prospect are painted upon the retina, they are all right with respect to one another, as well as the parts of the prospect itself; and that we can only judge of one object being reversed, when it is inverted from its original and natural position, with respect to other objects, which we see and compare it with.

It has been observed, that if we lay hold of an upright stick in the dark, we can tell which is the upper or lower part of it by moving our hand upward or downward; and know very well that we cannot feel the upward end by moving our hands in a contrary direction—just so, it is added, we find by experience, that upon directing our eyes towards a tall object, we cannot see its top by turning our eyes downward, nor its foot by turning our eyes upward; but must trace the object the same way by the eye, to see it from head to foot, as we do by the hand to feel it; and as the judgment is informed by the motion of the hand in one case, so it is also by the motion of the eye in the other.

This theory, if correct, more strongly marks the necessity of care and attention in such cases; for if

rather a mean state between disease and health; yet, if this degree of weakness is not speedily attended to, it may go on to obstruct the sight entirely, during the remainder of life. Unfortunately, however, there are too many instances of sufferers in this case, who wander in a maze of error, and actually turn this propensity to disease into the real disease itself, by imprudently quacking themselves; and, without any reference to the real cause of the complaint, making use of what are called "strengthening remedies," whose acrimony irritates and increases the evil. If to this we add the number of pretended oculists, with which society is pestered, quacks who are always consulted with avidity by the ignorant, in proportion to the magnitude of their promises, and who

---

the connexion between the organ and the mind be thus disordered, as it must inevitably be, there may be an incipient state of mental as well as of bodily morbidity, which cannot too soon be guarded against.

are careless how many eyes they may injure, provided it brings gain to their purses; and that too when a little rest, judiciously applied, would, in a short time, have restored that faculty which their *specific remedies* only tend to destroy, it is not matter of surprise that so many victims should be found suffering from their own folly.

If I am now asked how people thus affected may procure relief, repair the abuses already committed, and thence prevent a real malady from occurring, I shall answer that the means are as infallible as they are simple; a truth taught me by experience.

1. *It is first necessary, as much as possible, to regulate the use of the eyes by proper gradations; that is to say, not to deprive them totally, and all at once, of the exercise of their functions, which, as I have already shewn, would be as hurtful as a prolonged tension of the organ.*

2. *If the patient cannot, from his cir-*

cumstances, seclude himself totally from assiduous labour, let him, at least, endeavour to vary his modes of occupation.

3. *Let him shut his eyes, from time to time, whilst at works, or walk about the apartment or manufactory in which he is placed; or, which is more efficacious, let him go out into the open air, though but for a few minutes, which will produce a sensible effect.*

4. *Let him be careful to keep up the perspiration of the feet, by bathing them in tepid water, into which some salt and vinegar may be thrown.*

5. *A moderate exercise of the body by a walk in the open air, in which the eye may be amused with the varied picture of Nature's works, is so necessary to the relaxation of the visual organ, and to the renewal of its powers, that even the most ignorant must be acquainted with its truth.*

6. *Let him who is once convinced, that he has trusted too much to the strength of his eyes, be careful to abstain from all steady la-*

bour immediately on rising, or after his meals, as well as by candle-light.

7. Let him bathe his eyes often during the day in cold water; a remedy which, though simple in itself, will never fail of producing, though at first insensibly, the best effects. I have already remarked that tepid baths may be hurtful to the eyes: I repeat again that it is necessary only to apply the water in the gentlest manner, which will always answer the end proposed, as the very action of washing will soon give a degree of heat to the cold water more than sufficient for the purpose.

With these intentions, I have used, for several years past, a kind of rose-water bath, administered by a machine constructed on simple principles, and which has often been attended with the happiest effects when the sight has been fatigued. Of this machine a plate is annexed, which I shall explain, so that any common artist may easily construct one on the same principle.

The machine, generally speaking, may be made of tin or copper; but the little vessel, F, ought to be always of pewter, and to hold about five or six pounds, or about three quarts of water. The cylinder H consists of four divisions, joined together by sliders of copper, and which fit closely; whilst, in order that no water may escape from any part of it, each tube is fitted as a screw with rings of leather inserted; and by this means the whole machine may easily be packed up in a small vessel, F, when it is not wanted for use.

The ice vessel, G, ought to be filled with ice finely powdered, whose degree of cold may be increased, when necessary, by the addition of salt, or sal ammoniac.

The force of the *jet d'eau*, produced by the syringe, may be increased or diminished by the regulating key, E.

The ring A fits closely to the ring B, and fastens the cover C, when the machine is hung up for use, which must be done

Engraved for "The Art of Preserving the Sight." page 102

Fig. 1.

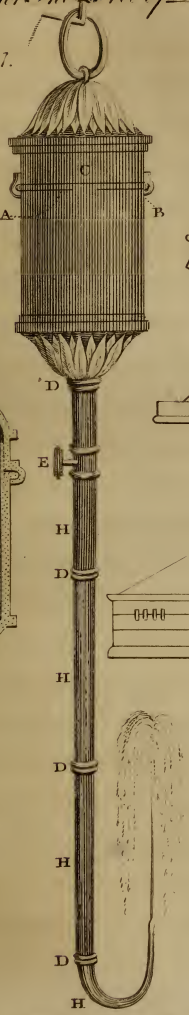

Fig. 2.

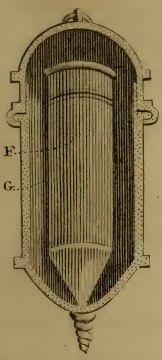

Fig. 4.

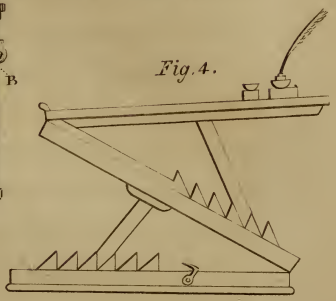

Fig 3.

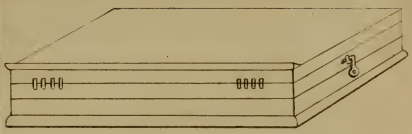

Swaine Sc.

Published Oct.r 1 1813, by H. Colburn & Co. Conduit Str.

so high, that the patient may not be obliged to stoop his head too much, thereby propelling the humours improperly. The whole machine may be about five feet in length, and requires an assistant at the operation.

The use of cold water requires, as every child knows, a certain gradation; of course, whoever wishes to avail himself of the use of this instrument will first be careful, for a few days, merely to cover his forehead with linen dipped in cold water, taking it away before it has imbibed any portion of heat. This must be frequently repeated, but with this particular care, that it must not be attempted during any sensible perspiration, nor immediately after getting up. Having continued this practice for several days, the patient may then begin to bathe his head and eyes with the coldest water he can procure; in such a manner that he may be able, about the eighth or ninth day, to use the *rose-water*

bath, but with this caution, that even then he is to pay a regard to the gradual degree of cold imparted to the water, as well as to the *force* and *continuance* of the operation.

Whoever shall punctually follow these hints will be able to return without fear to his daily occupations; but let him be careful not to risk, by improper conduct, a renewal of his disorder, as he can then never hope perfectly to recover that force of sight indispensable for nice workmanship, or close attention to continued occupation.

There is also another point which ought to be attended to, as important for the preservation of the eyes, which is,

That every person, whenever, and at whatever employed, should be careful to regulate his light, so as to have it always in an equal degree as much as possible.

To employ one's self near a window, opposite to which is a wall white enough

to reflect the rays of the sun, is, in fact, a voluntary sacrifice of the visual organ.* In

* The subject of reflection from a whitened wall has already been noticed; and though the facts connected with it are, in some measure, self-evident, yet it may not be unamusing to specify an experiment by the learned and indefatigable Boyle, which sets the matter beyond a doubt: for that philosopher, being anxious to ascertain whether white surfaces reflected more light than others, or not, placed a sheet of white paper in a darkened room, and then admitting a single ray of solar light, observed that it reflected much more light than paper of any other colour;—a considerable portion of illumination being given from it to the other parts of the chamber. It was also an observation of this gentleman's, corroborative of white reflecting the rays outwards, that common lenses would not easily set fire to white paper, whilst paper of any other colour was speedily ignited.

The image of the sun, also, is never so well defined upon white paper as upon black; and any person who chuses to try the experiment will see, that, though it is difficult to ignite white paper, yet if any part of it is coloured with ink, it will take fire very readily: nay, if the hand is covered with a white or black glove, and exposed to the direct rays

short, I have repeatedly had patients, who could not attribute their very obstinate and dangerous inflammations to any other cause; and of these, there have been many that, after being apparently cured, were yet incapable, during the remainder of their life, of any serious occupation, in consequence of the weakness which remained.

It is, then, an object of the first importance to avoid, in every kind of labour or occupation, all light which is reflected, or which falls too perpendicularly; so that lamps in general, even those of Argand, which are provided with screens, are unfit for use, because that they merely enlighten one object, or one part of the chamber, with a light too concentrated, whilst the others are comparatively in obscurity. Again, if the articles on which a person is employed, happen to be white or polish-

---

of the sun, the difference of warmth will soon shew which of them reflects and which absorbs the greatest number of rays.

ed, whether linen, muslin, lace, or metal, then the reflected rays fly off from the central point so strongly towards the eyes, that the visual organ is unable to bear them for any length of time without considerable injury; a circumstance which I know too well from my own experience. From hence follows another rule,

That we ought to spare neither expense nor trouble in procuring an equal light during every mode of employment.

We cannot, then, have too much light in an evening when occupied; a thing to which most people pay so little attention, that many believe that there is economy in sparing their expense in candles, without reflecting on the evils arising from it until too late.

In all particular occupation or labour, two candles at least are necessary before each person; nay, sometimes three or four, according to the nature of the employment; observing that these should be of an equal height, and placed in a

manner that the flame should not fall horizontally, but rather obliquely, upon the sight. The candlesticks should, therefore, be made so as to answer this purpose; at least, every person should make use of a book, or some other substance, to produce the effect. Even in reading, but particularly in writing, this is of great importance, as every person will acknowledge, if he reflects on the unpleasant affection which he must have often felt after a continuance of application. I must strenuously, therefore, recommend it even to the poorest to have *two* candles close to their work; for the object saved, by using only one, ought never to be put in competition with the injury which they must otherwise experience sooner or later.

Tallow candles are often complained of, and that with great reason; for when the wick is not justly proportioned to the thickness of the tallow, the flame vacillates, and also becomes clogged, sometimes being too bright, and sometimes too ob-

scure. It often happens too that they crackle and sparkle, particularly if the tallow is not well purified, or contains any particles more inflammable than the rest; this will always have a great influence upon the eyes, and can only be avoided by using wax candles; and, surely, the difference of expense ought not to be a consideration on a point of such importance.

Some people imagine that they may easily avoid the inconveniences arising from tallow candles, by using the Argand lamps; and it must be confessed, that on a first view one may be persuaded that their light is the best, because the flame is strong and tranquil, and because it may be augmented or diminished at pleasure, according as it is wanted. Another great advantage to be derived from the Argand lamps is, that, from their clearness, objects suffer so little change in their shaded parts, that one may even paint by their light, and mix the colours on the pallet; a thing totally impossible with any other kind of artificial light.

However, all these incontestible advantages of the Argand lamps become of no absolute value, as soon as we reflect that their light is both reflected and concentrated, so that we can never procure from them an *equalized light;* a thing indispensable in all kinds of occupation.

Many, who are fond of these Argand lamps, endeavour to counteract their bad effects, by using such as are made with green instead of white silk; however, by this they gain nothing; for, although the light, not falling so perpendicularly upon the articles on which they are employed, is not so concentrated, it consequently does not appear so dazzling as a reflected light, yet the effect of a concentrated light, in a direct degree, always remains, whilst the equal and salutary dispersion of the rays is as much deficient as before.

I know it may be said, that Argand lamps may still be employed with great utility in night-work, when the screens are taken off, because even then they are

free from all the defects of tallow candles; and it may also be added, that they produce a very strong, tranquil, and equally diffused flame; but then I must reply, that we ought here to recollect, that the goodness of an artificial light consists principally in its vapour being pure, which can never be the case with any lamp that does not possess some safeguard against the exhalations of the oil. I do not intend by this, however, to deny the great utility of this species of lamp; on the contrary, I shall have occasion to notice, in another part of this essay, that they ought to be preferred to any others we have, in many cases; what I have here said is merely from a wish to see them banished from the tables of those who are obliged to labour long with an artificial light.

Another rule on this subject may be mentioned, which is,

That all those who labour much, either with the head or eyes, even when provided with the best light, should be careful to perform their task, sometimes sitting, some-

times standing, in order to prevent too great a flow of humours toward the brain.

Let none of my readers despise a rule founded upon long experience; above all let it be attended to by all literary people, and all who labour with the pen, who must always attribute, in a great measure, the bad state of the eyes to the position in which they are too apt to continue whilst at work; a thing which, it cannot be denied, must always have a great effect upon health and bodily habit. On this head I might say much more, did it not rather lead me from my subject; it is also a part of medical arrangement, which has already been ably treated by others. It is enough, therefore, to say, that the end may always easily be answered by making use of a species of desk to be placed on a table, and which is so constructed as to be raised and lowered at pleasure. In the plate, figures 3 and 4, may be seen an outline of one, from the use of which great benefit has repeatedly been received.

Another observation is,

That he who has received from Nature brown or dark coloured eyes, should, in general, be more upon his guard with respect to them, than those whose eyes are grey or blue.

Any person who, for a series of years, has taken pleasure in remarking different powers of sight in different persons, will agree with me in the truth of this observation. After an attentive observation and comparison of all circumstances, I can aver, that it will always be found that grey or blue eyes, all other considerations apart, can support a much stronger and more continued tension of the visual organs than brown or black; that the vigour and duration of the sight consists, strictly speaking, in the colour of the eyes, and that its goodness arises from the greater clearness of the colour of the pupil, whilst, on the contrary, its defects proceed from the greater deepness of the colour. Thus, for example, deep blue eyes will support a less considerable tension of the sight than

grey ones; whilst brown eyes will be found less strong than blue ones.*

---

* It has been well remarked by a surgical writer, that the bad effects arising from our variable fashions, fashions which always lead to abuse, are destructive not only of bodily health, but also of bodily symmetry. It may even be said, that mankind employ their utmost industry and ingenuity, in order to confine themselves, and create new evils. The feet, the knees, the waist, shoulders, and neck, are altered in their form, from not being permitted to develope themselves agreeable to the intention of Nature. We become subject to callosities in the feet, to swelled veins, and choaking up of the cellular substance in the legs, which often render the slightest wounds incurable. The shoulders and arm-pits too, tightly ligatured, partake of the weakness of the superior extremities. The tightness of our neck-cloths presents a serious obstacle to the return of the blood by the jugular veins; and, in order to get rid of a pale countenance, we risk the swelling of the glands, lymphatic tumours, vertigoes, and even apoplexy itself.

The present state of human knowledge ought never to reconcile itself, in particular, with that most barbarous and destructive custom of tight lacing, to which both sexes at present submit; but

It is also an undoubted truth, that amongst one hundred persons with brown eyes, we shall scarcely meet one whose eyes are perfect; of the same nature is the observation that eyes of a deep colour are more subject to cataracts than clear ones, even under circumstances exactly similar.

As there are no rules, however, without exceptions, it may be objected that we see a number of people with grey or blue eyes, who not only have had a weak sight from their infancy, but even squint; but such instances can have no influence upon the general question.

The use of screens against light, and the preservatives without number which are coming so much into fashion, render it necessary that I should point out the proper time for their application, so as to

---

it is to no purpose to expatiate on its deleterious effects, as the false desire of pleasing, and the clamour of prejudice, will always drown the voice of reason.

receive a benefit from them; and the first rule is,

That these shades and screens are only useful to those whose eyes are very prominent, and whose eye-lashes and eye-brows are slightly formed.

For those to whom Nature has denied this species of protection, so necessary to the visual organ, cannot bear up long against the effects of constant occupation, and of a strong light, so that to them these shades may be necessary; but then they ought always to be formed of green silk in preference to any other substance. Besides this, they ought to be very light, for which purpose they are best mounted upon a wire skeleton, or a very fine brass frame; but I shall speak of them more at large in a succeeding part of this essay.

I would here recommend another rule as of the last importance with respect to the exercise of the eyes, a rule which is too much neglected by young people in general; and this is,

That we should be cautious of regarding any object whatever with continued attention, either at the close of day in dark places or by moonlight.

Whoever is imprudent enough to read or to write by such a light is guilty of an absurdity, of which he will too soon find himself the victim.

There is also nothing more dangerous than for one to fix their eyes long upon the moon. There are even instances of astronomers, who, having been in the habit of observing it for a length of time without telescopes, or coloured glasses, have actually been totally deprived of their sight. If any one doubts of the necessity of this caution, let him only fix his eyes upon it for a few minutes, particularly when at the full, and he will then sensibly feel such a painful contraction of his eyes as to convince himself of the fact.*

* This fact of the moon-beams being so peculiarly painful to the eyes is in itself another proof of the danger arising from rapid changes of light and

I may be told, indeed, that we can look at the moon for a long time during

---

darkness, and also of the bad effects of reflected light; for the disproportion of the real light of the moon to that of the sun is so great, that it is evident it cannot be the mere intensity of light that affects the visual organs.

Before some curious experiments were tried upon this subject by Mr. Bouguer, there had been considerable errors respecting the proportion of light from our two great luminaries; errors, not only in the minds of the ignorant, but even of philosophers, so that M. De la Hire was quite surprised to find that he could not, even with the assistance of a burning *mirror*, collect the moon's rays in sufficient quantity to produce the slightest increase of sensible heat.

This led the way to various experiments, from which it has been calculated that the solar light is three hundred thousand times greater than the reflected lunar rays, a disproportion that sufficiently accounts for the difficulty of collecting any material quantity of the latter into one focus; for as the best burning glasses, or mirrors, do not concentrate a quantity of light and heat greater than the proportion of one thousand to one, it follows that any focal collection of lunar rays, by the best mirror, will only

the day without feeling any disagreeable sensation; but the reason of this is simple, inasmuch as during the day the lunar light is not concentrated, so that one may easily distinguish objects around her. Besides, the atmosphere reflects a soft and blueish light, equally diffused; and as we know that the pupil dilates and contracts in proportion to the strength or weakness of the light which falls upon the retina, so it happens that during the day, the eye being free from any cause of rapid or forced contraction, distends itself easily, whilst at night the various objects are unequally illuminated; and, being often placed near to each other in extremes of light and shade, thus act with unequal influence upon the eyes, which will necessarily, sooner or later, produce the worst effects from different habits in the eye itself.

This also explains the cause of the

---

bear the proportion of one three hundreth part of the common solar rays unconcentrated.

moon appearing less bright through a telescope than with the naked eye, for then she is seen in a broad mass of light, as it were, instead of being in that dark circle which surrounds her without the glass, so that the contrast of light and darkness is not so manifest, so much of the light as acts upon the eye being equally diffused: to which it might be added, that an illuminated surface being increased, the light, so far from being magnified, is actually apparently less, the same quantity only being spread on a magnified surface.

A serious consideration of these various facts will convince my readers, I have no doubt, of the reasons why all *light-screens*, not only those which obscure distant objects, but also those placed on the table where we are at work, must be pernicious to the eye-sight.

CHAPTER III.

On the prudent Use of the Eyes in the various Stages of Existence.

I COULD produce numberless instances of parents and nurses who, in the very earliest days of infancy, have laid the foundation of an incurable weakness of sight in the little ones under their care. In doing this, however, they err through ignorance; not knowing nor considering that their eyes are not yet accustomed to the action of light, and that it is only by little and little that they can bear the effects of its salutary influence.

But how shall I impress it on the minds of nurses, and of females in general, who, unfortunately, are not in the habit of reflecting deeply upon causes and effects, that every new ray of light occasions upon the eyes of those innocents a new irritation; and that every unaccustomed and continued irritation must have a violent effect upon their tender organs.

If papa, or grandmamma, wish to see the new-born, it is immediately carried to the window, or unto the lightest place, when the poor infant immediately begins to cry without measure; but then he cannot tell what it is that hurts him; and every unnecessary means to pacify him are attempted, whilst the true cause of his uneasiness is never thought of.

If the relatives of the good lady in the straw should be numerous, or her visitants frequent, then the poor infant is exposed twenty times in the day, until the curious examiners have determined which of its parents it resembles most; and its little cries continue all the while, until a redness and swelling of the eye-lids take place, a yellowish serosity flowing from the eyes, and covering them continually. Then the nurses are astonished; and exclaim with wonder how it happens, that a child born of such healthy parents should be so soon tormented with acrimonious humours: whilst the acrimony itself must

be carried off by the nostrums of the midwife; an operation which closes with the necessity of calling in a physician, who too often finds an incurable weakness of sight, and sometimes even its total loss.

All these dangers are heightened by the accessories; for, in the first place, the apartment of the mother is kept in darkness, from an opinion that her eyes may be injured by the glare of day, particularly after a difficult case; and in the second, the poor weak stranger itself is immediately placed, perhaps, in one of the lightest chambers in the house. Who, that is possessed of common sense, could be supposed to adopt conduct so absurd? yet it is what is almost daily practised in too many parts of the kingdom.

Nor does there seem, in many other points, to be any attention paid to avoid what may be hurtful to the eyes of the new-born: indeed, it often happens that they place over, or near his cradle, some shining object, such as a mirror, or other

polished body, which the poor infant looks at with eagerness, and for a long time after he awakes, if permitted; nay, is sometimes encouraged to do it. Now, as this takes place perhaps twice or thrice during the day, the muscle of the eye, called the "Erector," of course undergoes a painful degree of motion; and if the object is at one side of the cradle, then the oblique muscles contract so forcibly, and in a manner so durable, that a habit of squinting naturally follows, (at least, if the attendants do not readily find out the cause of this incipient habit, and accordingly place the cradle so as that the infant is obliged to look straight forward at any object which may attract his attention,) because his eyes will always keep in the same direction, and it will soon become totally impossible for him to fix them on any object in a natural manner.

From these considerations we may easily judge what prejudice a custom so injudicious must do to the visual faculty, with-

out taking into the account the fact of the beauty and symmetry of the eyes being totally destroyed; a point on which there is no occasion to enlarge.

The same defect in the direction of the *axis* of the pupils, is not less frequently occasioned by the habit of holding brilliant or shining objects close to the nose of the infant, as things which are likely to catch his attention. In these cases the contraction of the muscles towards the nose is so strong, that a considerable part of the pupil is often concealed within the corner of the eye, or *canthus;* nay, even in people of advanced years, I have seen instances of the same bad habit taking place, from their having a small pustule or pimple on the nose, which they were continually prompted to look at: if so, then, we cannot doubt of its effects on the weak sight of a puling infant.

The only means, in my opinion, of guarding against this bad habit, or of curing it when acquired, is to fix two pieces

of smooth, but thick taffety, to the child's temples, so that if he should attempt to look at any new objects through the small canthus, or outer corners of the eye, the visual organ would be thus thrown back into its proper line of direction. But as children, even infants, deceive us sometimes, that may even take place here; for having been induced on two different occasions to advise this remedy, without its having the ordinary effect, even though I was assured that it had been faithfully adhered to, I was induced, therefore, to pay some personal attention, when I noticed that the child resisted the application; and I soon discovered that two infants, neither of them a year old, had always laid hold of these *winkers* as soon as they were unobserved, in order to pull them towards the nose, thereby to avoid the trouble of looking at objects in a manner different from that to which they had been accustomed; in short, as soon as I discovered the cause of the evil, and prevented

its recurrence, the children became cured of their bad habits, and ceased to squint.

Whoever has been witness how much parents and nurses injure, by inattention and injudicious treatment, the eyes of their little ones, must sigh to see them wander so far from the end they have in view, that of bringing up men well fitted for, and useful to, society; whilst that the poor sufferers, in the very flower of youth, are deprived of all the important or agreeable occupations which require and cherish a good sight. But it would be in vain even to preach daily against abuses so deep-rooted, or against the injury sustained from the usual mode of education; whilst, notwithstanding all the solicitude that a person may have to combat, one is at last compelled to cease from the repetition of advice, drawn from them, indeed, by the cause of humanity, but which is so little attended to in any case.

Many parents seem to take it as an established maxim, that they must keep

their children continually occupied, lest they should become idle, or lest indolence should turn them from that pursuit to which they are destined, or from the acquirement of those accomplishments in which they are intended to shine. In consequence of this the poor martyrs are constantly shut up in the same chamber, occupied at first with their playthings, then with their studies, and often without the slightest exercise in the open air.

Then come the masters, if the poor martyrs are cooped up at home; and there is no end to writing, drawing, sewing, embroidery, music, &c., until the little ones, driven beyond their powers, can no longer support it without complaining of their eyes.

Too often, indeed, their complaints are useless; and although an experienced physician should be called in, who may speak from the dictates of his conscience to the headstrong parents, pointing out the excess of hurtful labour, yet the

ordinary reply is, " that they cannot too soon accustom them to employment, if they wish to make any thing of them."

I shall not enlarge upon this silly obstinacy; but I still feel it my duty to recount some of the deadly results which are thus unnecessarily braved, and on which people are not apt to reflect until too late: and I appeal here to the whole medical world, if these prejudices have not often been productive of the loss of sight, sometimes even of life, to many children of both sexes.

Girls, above all, have the saddest lot. To them, relaxation is almost unknown. Teased, without ceasing, with all the minutiæ of education, and of the finer and more difficult works, they are never permitted to enjoy either air or liberty, until that is too late to be of service to them; nay, the very exercise prescribed to them, becomes in itself a laborious task, as any one may witness in seeing the almost funeral processions of boarding-school girls

in the environs of the metropolis, processions that seem rather intended as *walking advertisements* of the respectability of the school itself, than as relaxations from the more serious studies of the school-room.

It must also be generally acknowledged, that failure almost always attends this plan, the avowed object of which is to keep children constantly occupied, in order to guard them against the errors which besiege their youth. The puerile care thus taken of them, and the stiffness with which they are brought up, render them old even in the days of youth; but the genius of children who are in good bodily health, is always lively enough of itself to prompt them to employment, whilst every effort which is made to constrain it is both useless and of a contrary effect: as the taste for labour would conquer in them all other tastes, if they are taken with it, whilst the bodily health will always suffer in proportion as they are compelled to attend to employment.

If children must be occupied, it ought always to be according to their powers; that is, in proportion to the strength of their constitution, and the extent of their understanding: in addition to which they require much variety as well as frequent relaxation, in order to refresh both mind and body. Failing this, these little ones are like plants in a greenhouse, without either vigour or perfume, and whose blossoms will fall before the northern blast. Of what use, then, is all this sedulous care?—and of what service is it, in particular to young females, especially of independent rank, that they should be obstinately obliged to dedicate, nay, to sacrifice, their best days to the acquirement of accomplishments, which, if not useless, are seldom called forth; solely, perhaps at an immature age, to be deprived of all those pleasures which a sound sight affords?

Let parents weigh these queries maturely, and they will no doubt relax a

little of their prejudices; and well shall I be rewarded, if these lines shall only procure these poor infants a little more daily relief, and a little more enjoyment of the fresh air.

I shall now proceed to point out such rules as are proper to follow for the best employment of the sight, at the different stages of existence. In the first place,

*It is proper to accustom infants, at an early period, to exercise their visual faculty in the examination of objects at a distance, but without forcing them to it; because the eye must, as yet, be too tender easily to support the slightest contraction; whilst the flow of humours towards the head is also in opposition to the basis of a good sight.**

* It has been ascertained by actual experiment that the eye possesses more voluntary motion with respect to distant objects, than the mere contraction or expansion of the pupil. Dr. Priestley observes, that the contraction of the pupil certainly tends to lessen all indistinctness of vision, whether the objects be too remote or too near, as may be easily ascertained

To the neglect of this rule it is that we must attribute the prodigious number of children, who, although sprung from healthy parents, commence, at a very early age, to suffer in their eye-sight; and also the great number of near-sighted

---

by the help of a portable camera obscura. He adds, that it is certain that the pupil is not contracted but dilated, for the purpose of viewing objects that are very remote; as without a dilation of the pupil, in such instances, a sufficient quantity of rays could not be admitted.

When objects are near, and well illuminated, the contraction of the pupil may be sufficient for viewing them distinctly, but there must be some other provision than that for remedying the indistinctness of objects that are very remote.

In addition to this it has been proved, by a series of observations of the ingenious Dr. Porterfield, that the eyes possess a power of changing their conformation, and of adapting themselves to various distances. He also says, that this change always follows a similar motion in the axis of vision, with which it has been connected by use and custom.—This has been more particularly illustrated in a preceding note.

people to be found amongst the more affluent ranks of life.

No attentive observer will deny that these evils ought almost always to be attributed to a bad treatment of the sight in early youth, and principally to the habits which the visual organs are permitted to adopt; but more particularly with respect to the near-sighted who are found in the higher orders. I may ask, indeed, how is it to be expected that the human eye will accustom itself to the observance of distant objects, whilst it is almost in the constant habit of looking at the smallest objects, and those too within a very circumscribed distance? But a more ample discussion of this part of the subject I shall reserve for a succeeding section. The second rule is,

That it is extremely dangerous for the eyes of a child to force its eye-sight often, and for any length of time, before its bodily powers have began to acquire strength.

The very consequences, indeed, of forcing

children to study at an immature age, are sufficient to shew the truth of this position: particularly when we contemplate how soon the body becomes pale and meagre, the countenance bloated, whilst the glands begin to shew themselves everywhere, particularly in what are called "kernels in the neck;" and the faculties of the mind diminish, and are sometimes lost, along with the agility of the body and the power of an extensive vision. A third rule is,

That as soon as the body has acquired its growth, the eyes will then be best able to suffer any extraordinary degree of tension.

In fact, Nature has so intimately, and so wisely, connected the relative strength of all the human organs, that in most instances, where care has been taken, the extent and the force of the sight at this period of life are truly astonishing; and that without the visual powers being in

the least affected. The fourth observation is,

That, even at an advanced period of life, the eyes will not easily be fatigued, if, during youth, an economical use has been made of them, whilst that in later periods they have not been denied the necessary relief, or that degree of care which they always demand.

It happens unfortunately, however, that in these two latter points most men are deficient: for many, believing that the best spectacles possible are just invented, hurry to the purchase, in order to arm their eyes with them, even at a very early age. Others, on the contrary, pretend to fear nothing from decay; and wishing to appear always young, suffer from false shame, in abstaining from the use of spectacles, which are actually become necessary to them, and endeavour to supply the defect by means of a common magnifying glass.

With the fair sex, in particular, this species of destructive vanity is too common; but they ought to recollect, that there is an age beyond which it is unsafe to deceive themselves out of ten years, even though they should be able to deceive others. For the fair, indeed, every allowance must be made; but none for professional men, and fathers of families even, who are actuated by the same vanity, often to the total destruction of their eyes.

In general, indeed, it happens, that no person knows precisely the time when spectacles become necessary: so that some begin to use them too soon; whilst others are so tardy, that they seem to have recourse to them only as the last specific for the preservation of their sight.

It is essential, therefore, to ascertain precisely this necessary time, for all persons, which I shall now endeavour to do: but shall first say a word or two on the ridiculous and insufficient mode hitherto

adopted for the fixing of that important era when spectacles ought to be worn.

Many people imagine that there is a certain period of the human life at which it is absolutely necessary to have recourse to them; and, warped by this prejudice, they have given rise to that pernicious plan of many opticians, to prepare spectacles for every age, which they of course dispose of to the ignorant and inexperienced.

As soon as a man of fifty years of age, for example, has, through any circumstances, forced his sight for a few days, he begins to imagine that he must have spectacles; he then calls at every shop to get the very best, and he rests not until he has found those which he thinks suit his sight; these, then, good or bad, he wears until his sight is fatigued; and this new spectacle wearer is, at length, convinced that he can see better with his own two eyes, than with all the spectacles in the metropolis.

This is, in short, the history of thousands: happy, indeed, are they who do not experience any worse effects; the loss of their sight being compromised by the loss of a few shillings. In fact, do we not meet many men, who, at the age of seventy, or even eighty, enjoy their eye-sight as well as at any period of their life, having no occasion to trouble themselves with spectacles, whilst their children cannot do without them, though, perhaps, not yet past forty?

It sometimes happens that spectacles are adopted by persons on the first appearance of dulness of vision, without considering whether their complaint is likely to be permanent, or, as in fact, only temporary. If the former, of course spectacles such as afford relief with the most facility are proper; but if only temporary, then they ought not to be adopted without the advice of an oculist, as well as of the optician.

Difficult is it still, to determine any era

in life, when spectacles ought first to be used, and much more so to point out any specific form. Some imagine, that the good effects to be derived from spectacles depend on the conformation of the pupil of the eye, and of the internal parts which serve for the refraction of the rays of light, in proportion as they are more or less convex.*

---

* It is not the design of this little work to enter at large upon the philosophy or anatomy of vision: yet it may be noticed, in illustration of this observation, that, whenever the tunica cornea of the human eye is very protuberant and convex, then a considerable refraction takes place with respect to the rays of light at their entrance into the aqueous humour, by which they are collected into a focus before they fall upon the retina, unless the object be placed very near to the eye, so that those rays which enter the visual organ may possess a considerable degree of divergency.

It is unnecessary to say, that people, suffering under this predicament, are called purblind; but it may be explained, that, as the apparent size of an

Those who are of this opinion are certainly approaching nearest to the truth;

---

object increases in proportion to its nearness to the eye, so the purblind can see objects of the smallest size with greater clearness than other people, inasmuch as they can bring those objects much nearer to the eye. It also happens, that their sight remains unimpaired, though not unaltered, much longer than that of other people; for though the tunica cornea of their eyes becomes flatter through age, from the diminution of the redundancy of humours which distended it, yet even then they are on a footing with more youthful persons, whose eyes are well formed at first, but who, on the approach of old age, find the cornea grow flatter, through the want of a sufficient quantity of aqueous humour to give it the proper degree of convexity, so that the rays diverge too much before they reach the retina, obliging them to place objects at a much greater distance, or else to correct the defect by means of lenses.

It is said by opticians, that eyes which are of a due convexity, cannot discern an object distinctly at a smaller distance than six inches; but of course many objects must be too small to be seen at that distance, as they cannot subtend any sensible angle; yet it has been proved, in several instances, that a silken thread, of two seconds and a half, can

and yet they are still at a great distance from it; because, even from this position, they can draw nothing certain with regard to the precise point of time when it is exactly necessary that spectacles should be adopted: for a very convex eye may shew, at an early age, all the symptoms which would lead us to believe that it will require spectacles at forty years of age; whilst others again, in the same state, may remain good to ninety years.

But if we are to have recourse to spectacles, sooner or later, in different people, that precise point will depend not only on the conformation of the organ, but also on the care that is taken of it, and on the wise mode in which it ought to be employed during youth and early manhood. In fact, it depends but too often upon ac-

---

be seen by a well-constituted eye, though a spot of the same diameter cannot be distinguished, not making a sufficient impression upon the retina.

cidents, even the most trivial, or upon indisposition attacking particular individuals, whilst others are exempt.

Thus, then, it is only by evident and permanent symptoms that it is possible to determine safely, whether we ought to adopt spectacles or not. These symptoms are so striking, and always of such an equal appearance, that every person, in whom they begin to shew themselves, may provide himself with the proper glasses, simply following the rules which I shall now lay down, without his having occasion to refer to any other authority.

He must first remark how far his point of sight, or point of distinct vision, can extend; that is to say, at what distance he can see objects most distinctly; for, in the case of which I am now speaking, one is first obliged to remove small objects further than ordinary from the eye, in order to see them distinctly.

Secondly, we may consider the symptoms as indicative, if, from an impulse

to which we are not accustomed, we approach nearer to the light when we read or work; a circumstance noticeable in all elderly persons, who, for the most part, hold their books, or any other article, close to the light, in order to read with more facility.

Thirdly, if very small objects appear confused, after we have looked at them earnestly for any length of time; this happens chiefly if they are shining, or of a very light colour.

Again, if the eyes, after a slight tension, become so much fatigued, that we are obliged to turn them to other objects, in order to give them some relaxation.

And, finally, if the sight, at the instant of awaking, is very weak, and does not recover its customary degree of force until some hours after, when the excitement of the air and light shall have had time to operate.

As soon as these signs shew themselves, we ought not to defer a single day in the

procuring of good glasses; but those which are bad, or, which is the same thing, are not agreeable to the wants of the eye, will always do more harm than good to that tender organ, and it will be better to do without them. In short, innumerable observations have afforded me so much experience, that I feel it the most sacred duty to point out, in the strongest and plainest terms, the properties of good spectacles.

In the first place, good glasses ought never to magnify the objects very much, but merely to shew them to us clear, simple, and exactly such as they really are.

Some elderly people have sometimes a sight so acute, that they can distinctly read a middle-sized print at a distance even of six feet: on the contrary, writing or print appears to them confused and illegible, if they wish to read it at the distance of eighteen or twenty inches, which healthy visual organs can easily do.

Such people ought, without doubt, im-

mediately to provide good spectacles which are considerable magnifiers, but not to go to the very extreme with regard to their lenses; to avoid this, the most certain proof that they are beyond proper bounds, and that they have made choice of glasses too convex, will be, if they are obliged to bring the book nearer to the eye than what a sound sight requires, that is, about eight or nine inches; and from this comes another rule,

That every person ought to be able to read conveniently, with his spectacles, at the same distance that he was accustomed to, whilst his visual powers were perfect.

From these slight remarks we may see the absurdity of the various assortments of spectacles which are found in the shops of opticians, whose convexity, according to their statement, is regulated to the various gradations of age. If it happens, however, that good glasses cannot be got at one place, they may at another, even by a written order; for all that is necessary is,

to hold a book before the eyes, at that distance where the individual can read most distinctly, then let the distance be measured with a thread between the eye and the book, which thread, if sent to an intelligent optician, will be his guage for the making of two glasses, provided, at the same time, that the point of view of each eye is sent, since it rarely happens that it is the same in both.

Another rule is, that good spectacles ought to be formed of pure glass; that is, without globules, or rays, specks, &c. which may easily be discovered by holding each lens towards a strong light.

This requires more attention, because there are so many glasses offered for sale of different materials; and it is above all things necessary, that spectacles should be kept in their case when not in use, in order to preserve them from being injured, even by imperceptible scratches.

Again, good glasses ought to be, in all their parts, of an equal thickness, in pro-

portion to their convexity, as well as of an equal form.

This is another quality but little attended to; but which may always be ascertained by means of a guage, or by holding the glasses obliquely over print, all the letters of which will preserve their true character if the glasses are correct:

And a final rule is, that the glass which agrees with one eye ought never to be applied to the other: but this is an error that cannot easily happen, if spectacles are properly made; though the poor, who often have them to fit on with a piece of ribband, may often commit this error, and ought, therefore, to be put on their guard with respect to it.

In the present improved state of manufacture of optical glasses, it may appear superfluous to expatiate upon this rule; yet, as there are many parts of the kingdom where glasses of an inferior quality are sent for sale, I still think it in some measure necessary to point out the pro-

priety of fixing the glasses on the head, as we see that in extreme old age the eyes are so much disturbed by the pressure of the nose, as to become watery on the application of any force to it, whilst it again is affected by the introduction of any pungent matter into the eyes. In short, one may judge of the inconvenience produced by those unmounted spectacles, particularly at first use, from the fact, that numberless persons, who have attempted to make use of them, have soon been obliged to lay them aside, not being able to support that species of fetter, which the mounting always guards against, by holding the spectacles so as to sit lightly upon the nose, besides fixing them with a degree of steadiness, which can never take place if unmounted.

When spectacles are used merely to give protection to the eye, white glasses will always be better than green ones, because they require less exertion of the organ itself; but when the green medium

becomes absolutely necessary, then they ought only to be worn out of doors.

In the house, especially when reading, it is better that the rays of light should fall on the object through a green medium, than come reflected through one to the eye. This may either be effected by reading at a window filled with green glass; or, if by candle-light, by having a frame filled with a green plate of glass, through which the light shall fall on the book.

I cannot conclude this division of the essay without remarking, that the frequent use which is made of microscopes, of optical glasses, or opera glasses, spying glasses, and of the common, and absurd "quizzing glasses," as they are designated, not only is the cause of great danger, but, in fact, absolutely of the most pernicious consequences to people of all ages, but more particularly to the near-sighted, so that I cannot sufficiently warn my readers against the indiscriminate use of them;

although it must still be confessed, that in some cases they may be of advantage. I do not, therefore, condemn the things themselves, but merely their abuse; and shall, moreover, be careful to point out those cases in which they may be had recourse to, particularly in certain kinds of labour, as well as the prudential rules that must be always attended to in their use or application, and this, without any exceptions, in order to prevent the most deadly consequences which would otherwise invariably follow.

That spectacles are absolutely prejudicial to healthy eyes is evident: no other proof, indeed, is necessary than the great number of fools, both old and young, who run about the streets with their glasses mounted, although Nature had kindly bestowed on them very good visual organs; and who thus, merely in compliance with the dictates of affectation, have ruined their visual faculty, by always poring through these unnecessary instruments.

These gentlemen, no doubt, suppose that they thus distinguish themselves from the crowd; or it may be, in many cases, that they are used for the purpose of regarding, with more confidence and ease, men honester than themselves.

Upon the whole, he who is really near-sighted, is unhappy enough in thus losing the greatest part of the enjoyments which depend on a sound visual faculty, and in being very often reduced to the necessity of failure in the common rules of politeness and of society: he is as worthy of excuse as of pity—but he, who counterfeits, ought to be treated always with the contempt he deserves, which, perhaps, is the only means of obliging him to desist from an absurdity, for which, however, he is but too often severely punished sooner or later, by the destruction of that faculty with which he has sported so wantonly.

CHAPTER IV.

On the most proper Seasons for the Exercise of the Eyes.

With respect to the proposed subject of the following chapter, I shall offer some rules, not only extremely necessary, but also so clear and simple, that they cannot fail of being generally understood.

In the first place, the morning, after having slept soundly, but not too long, is without doubt the most propitious moment for the absolute exercise of good eyes; because, at that period, the sight can support the greatest degree of tension, in consequence of the whole body, eyes included, having just acquired new powers.

But care must be taken, not to engage in any serious occupation immediately on first rising, and when scarcely awake; for all sudden transitions from one state to

another, as from an entire relaxation to absolute tension, produce through all Nature a most remarkable effect, particularly in the nervous system. All labour, therefore, at that moment, we may consider as likely to be attended with prejudicial consequences. A second rule is,

That immediately after meals, we shall act wisely in not engaging in any occupation which requires sitting.

The reason of this is evident, because that we are so apt to yield to the desire of sleeping, which naturally follows the disposition to think intensely; in a word, the heaviness arising from the flow of humours to the head renders us but little disposed to labour: in addition to which, it may be remarked, that the state in which one naturally is after eating becomes of more dangerous tendency, if there are added to it a contraction of the sight and of the brain, and a pressure upon the abdomen.

To be convinced of this, it is only ne-

cessary to look at people under the influence of this custom, when we shall always find their faces red, their lips livid, and the white of their eyes blood-shot and inflamed.

From these symptoms we may draw our third rule,

That all labour or occupation, of whatever kind, and which may strongly affect the eyes, ought to be moderate, but particularly when the blood is more heated than usual.

In direct opposition to this principle is the practice of every public man, whether barrister, preacher, professor, lecturer, or even member of parliament, who, in such cases, shall enter upon any decided application, after having been engaged in the public exercise of his duty, to labour that occupies too strongly either the sight or the mind: for, in fact, the best constructed organs will not long remain so, if often put to the test. Further, it must be allowed, that the preacher who is not indifferent to

the subject of his discourse, and who does not fulfil his office like a venal hireling, and also the orator who is convinced of the truth of his own arguments, and wishes to convince others, must alike speak with some degree of warmth and agitation; but let them speak even in the coolest manner possible, there is still such a flow of blood to the head, at the moment, as to render the eyes incapable of serious occupation.

I might, indeed, cite many tragical instances of men of talents, and of extraordinary volubility, who have brought on themselves a weakness of sight approaching to blindness, and which has unfitted them for their various functions, merely from having made an improper use of their eyes, after the exertion of public speaking.

The fourth rule of necessary observation is,

That it is not less worthy of attention to preserve the eyes from all strong tension, in

the evening, particularly if near to an artificial light.

He who can abstain, during the long winter evenings, from all occupation that affects the sight, will preserve it for a long time; nevertheless, it may even be considered as something gained, when a person can find the opportunity of choosing such particular departments of his occupation as will not exact, at the same time, the exertion both of mind and visual faculty.

It happens, unfortunately, however, that even in the middle and more independent classes of life there are many young persons, and indeed others of more advanced age, who are obliged to pass great part of the evening in occupations which too much engage the powers of the mind and sight. Such persons, therefore, are highly deserving of our pity when they complain of a weakness of sight, which forces them to break off from useful labour, and which even renders them incapable of pursuing their proper occupations; but if any abuse

of our sight is blameable, what shall we say to those silly women, and giddy girls, who every night sacrifice a part of their repose for the purpose of reading absurd romances and insipid novels? Who can grant to them the least portion of pity?—no more, indeed, than to others, who trifle away both the day and the night in filling their heads with nonsense, busying themselves about nothing, or worse than nothing, and thus ruining the health of one of our most precious faculties?

CHAPTER V.

The Care of the Eyes in various Species of Labour and Employment.

It speaks for itself, that under this head I shall treat solely of such occupations, as at the instant, or very soon after, have an absolute effect upon the eyes; but these are in themselves so numerous,

and so diversified, that I might draw up a volume upon this part of the subject alone. I shall limit myself, however, to the considering, with as much brevity as possible, such cases as are of most ordinary occurrence, and most important in their nature and consequences.

The first rule for notice is,

That the table or desk at which we are occupied should be placed in such a manner, that the light shall fall obliquely over the left shoulder.

If the desk, or table, is thus disposed, one may then support considerable fatigue, particularly if attention is paid to a former rule, and use is made of the pulpit or desk already mentioned, and described in the plate, so as that the labour may be performed, sometimes sitting, sometimes standing. Whoever shall obstinately sit at his work, even if his eyesight is the best possible, will soon perceive a manifest weakness in his visual organs, caused, in a great measure, by the

pressure on the abdomen and instestines, and by the flow of humours propelled towards the head, whenever the mind is also strongly exercised. From this it happens, that the natural functions are so soon disturbed in some constitutions; and from hence it results, that the obstinate constipations I have spoken of have such a deadly effect upon the eyes. From this we may also understand the reason why the learned, the secretaries to public functionaries, and all others who have much writing to perform, often experience the lot of the tailor and the shoemaker, since like causes always produce like effects: with this difference only, that the former begin to experience the bad consequences rather sooner than the others, inasmuch as the abuse of the faculties of the mind is often joined to that of the sight.

There are some employments, indeed, which do not permit a man to seat himself as he pleases, such as those of the engraver and the watchmaker. The first

of these, in order to regulate their light, make use of plates of polished copper to reflect it, as well as a frame of white paper, of sufficient size, placed against the window; but I am convinced, from the acknowledgment of many artists who have followed my advice, that the best effects accrue, not only to engravers and watchmakers in general, but to all classes of workmen who are employed on polished substances, from the covering the frame with pale green paper or silk, instead of white paper, as is now used. He who has not tried it cannot form any idea of the soft and genial light which is thus equally diffused over the objects with which he is engaged; nay, to all people engaged in writing, or those occupied on *white work*, whether industrious sempstresses, or the higher ranks of females for their amusements, particularly at boarding schools, the benefits resulting from this arrangement will soon be self evident.

If the person shall be seated at a win-

dow opposite to which is a wall that reflects the rays of the sun, then this instrument, or *paralumiere*, as it may aptly be termed, ought to be large enough to cover the entire casement, always observing that it ought to hang obliquely.

I have noticed, among many artists, a most pernicious contrivance of globes, or spheres of glass, filled with pure water, in order to augment the light. Such balloons cannot fail to be most detrimental to the sight, if placed upon a work-table where the day-light passes horizontally: to be convinced of this, it is only necessary to refer to what I have already said with regard to the partition of light, or to look for a few minutes at one of those spheres of coloured fluids, which are so ostentatiously placed in the shop-windows of chemists and apothecaries in the metropolis, who might be supposed bribed by the oculists and surgeons to destroy the sight and break the limbs of the unfortunate passengers exposed to their influence.

Some workmen or artists may, perhaps, object that the simple light of a candle is not sufficient for the species of occupation in which they are engaged, and that they require a much stronger light. It is very true that this may be the case; but then I would recommend to them the Argand lamps for this purpose, which ought to be hung up in the middle of the apartment, a little elevated, under a screen painted white, and fitted with a tube or funnel, which shall communicate with a ventilator in the window.

In this manner a considerable space of the apartment may be rendered so strongly lighted, that a number of persons sitting round a table may be occupied on the nicest workmanship; at the same time that the apparatus spoken of shall guard them from the heavy vapour of the oil, so pernicious to health, and even to comfort. If it shall happen, that Nature has refused the necessary preservatives for the eyes to any of the persons employed,

and who, from the deficiency of eye-lids or of eye-brows, may be too much affected by the brilliant light, they may always prevent any bad effects arising from it, by means of a common shade of green silk, made as such things are usually worn.

The second rule under this head is,

That it is always extremely hurtful to hold a book, or any writing, behind the light, or turn one's back to the window, for the purpose of reading with more facility.

The reason is obvious: because the rays of light are too directly reflected, and it must be observed, that the injury will be greater in proportion as the paper shall be more white, or the print finer: a rule, indeed, which ought never to be lost sight of by such as may almost be said to pass their lives in reading and in writing, if they wish to enjoy their sight to an advanced age.

Of equal import is the third rule:

To avoid reading too much during the

evening, and rather to adopt writing, where a certain portion of labour must be executed.

To him who is untaught by experience, whether reading or writing is most hurtful to the sight, I may appear too minute in these observations; but let any person who doubts it, only make the experiment fairly and attentively, and he will soon be convinced of the truth of the rule.

In speaking of writing, I do not allude particularly to copying where great pains are taken; and from whence it results also, that fine writing is more dangerous in the evening than even reading can be.

Some artists, particularly engravers and watchmakers, cannot do without magnifying glasses whilst at work; an abuse which is always followed by the ruin of their eyes, sooner or later; indeed, with different individuals, what adds much to the danger of these glasses is, that the artist often holds them in his hand. Watch-

makers, above all, fix them so close to the eye, that one might sometimes almost suppose them to be glued to the eye-lids; a practice which arises from the necessity of employing both hands in their work. There is nothing, however, so prejudicial as a continual changing of the point of sight, which must always take place in moving the position of the glass with respect to the eye, or to the object on which a person is employed. From thence also, as I have noticed in an early part of this essay, the eye suffers more or less from the external pressure of the magnifier, according to its application being of long or of shorter duration. A slight reflection on those facts must convince my readers how readily the eyes may be affected with the *mode of use*, even though the species of occupation should not of itself be instantly prejudicial to the good state of the visual faculty.

On this part of the subject, then, I shall lay down a fourth rule, which is also of some importance,

That whoever is obliged to pursue a constant labour, one that requires the use of magnifiers, ought always to have them fastened with a ribband, or with such a species of mounting as shall keep them in the same position during the whole period of their application.

This is also of importance to old people, who indulge in a pernicious habit of using great magnifiers; for these are doubly hurtful to them: in the first place, they are no sooner accustomed to read with these glasses, than they indulge in others of higher powers, until at last the most powerful will scarcely satisfy them; and, in the second place, they hold these glasses in their hand, when, perhaps, a cough may be so violent and importunate, that they can only keep them steady by resting an arm upon the table. In a word, it is thus, that, in wishing still to appear young, we actually hasten the term of old age. Almost all those who use these glasses never apply them but to one eye,

always keeping the other shut; this may be permitted at the theatre or opera-house, where it only takes place for a few minutes, without any absolute danger; but when it is often repeated, and that one eye is kept idle during a long space of time, as in reading, or any other occupation, then the worst effects may be expected from it.

It is then, as a fifth rule, absolutely necessary,

That whenever a single glass is used, it ought to be applied alternately to each eye; and this, whether it shall be microscope, telescope, or common eye-glass.

The application of this rule is difficult to no one, not even to artists, if they will take the simple means of fastening their magnifier sometimes to one eye, sometimes to the other; for to hold the glass in each hand alternately is not possible with any but ambidexters.

A sixth rule is,

That all artists, or workmen, whose employment is connected with polished sub-

stances, such as goldsmiths, jewellers, &c. should regulate their labour so as that they should be occupied during the evening on such substances only as are unwrought, or which are not very bright.

I have indeed operated on many cataracts, which could only be attributed to the working on polished substances by candle-light; not to speak of other more grievous and painful diseases of the visual organ, arising from the same cause.

A seventh rule is,

That painters, who execute large pictures, ought always to cover more than half of the window near which they sit, with a curtain of green silk.

It would be of importance, for all artists of this description, if they could always work in an apartment where an oblique light comes in from above; but, though they cannot be provided with this convenience, they may at least avoid all horizontal lights, which not only perplex the artist whilst employed, but also

fatigue and weaken his eyes by the reflexion of the brilliant colours. From this it naturally follows, that if there are windows in the apartment which produce an unequal light upon the painting, they ought to be carefully shut up, or covered with thick curtains.

An eighth rule is for a humbler class of society, and is,

That all artisans who work at a blazing fire, ought often to wash their eyes with cold pure water.

An attention to this will not only render them fitter for their work, since the eyes, when refreshed with cold water, seem to acquire new vigour; but it will also tend to take off some of the dangerous effects produced on the eyes, sooner or later, by the heat of a constant blazing fire and light. In support of this I can aver, that farriers and blacksmiths, whitesmiths, and cooks, are often subject to blindness, or partial defect of vision, in advanced life.

A ninth rule, dedicated to the working classes, is not less necessary —

Pointing out to all those who work in wool, particularly carders and spinners, and all those employed in cotton and woollen manufactures, &c. that they should often wash their eyes, to free them from impurities ;

For the fine dust, almost imperceptible it may be called, which wool disperses, produces cataracts, obstinate inflammations, swelled eyelids, &c. ; as I have often experienced in the course of my practice. Indeed, with work-people of this description, pure water is not of itself sufficient to prevent the dangerous effects of the woolly matter ; and for this reason I would recommend, instead, a solution of gum arabic and litharge of gold, or a weak solution of white vitriol, as I have noticed in a former part of this Essay.

By a rational attention to these few simple rules, as applied to particular cases, not only artists and artisans, but

people of all ranks, may direct themselves with regard to the preservation of their eyes in a sound state. For example, silk-weavers, whose eyes are but too much affected by the shining colour of the silk, may easily judge, from what I have said, that it is essential for them also to bathe their eyes with the above named solution, and alternately with pure water. To workers in silk also, I would even recommend another precaution, which is, that the same person should not always be employed to hang the silks out to dry in the open air, nor even in tenter grounds, as the continual reflexion of so many different colours may be highly prejudicial. To bleachers of linens and cottons, and to all persons engaged in those manufactures, similar precautions may be given: nay, even practical chemists and philosophers need not disdain to avail themselves of hints which might otherwise be unthought of in their ardent pursuit of knowledge.

CHAPTER VI.

On the Relaxation of the Sight, after Cases of Extreme Tension of the Optic Nerve.

WHENEVER the duties of our professions or employments require a very strong tension of the sight, and that often renewed, there remains for us but one mode of preserving the visual organ, if not in perfect health, at least in such a state as that its use may be prolonged. This rule, or mode, is to give it frequent relaxation from labour, for every one must feel the indispensable necessity that Nature has placed us under of reposing our various members, if we wish to impart to them a new vigour.

In cases of dulness, let it also be remembered, that although a want of susceptibility is the cause, yet the treatment, in some measure, must resemble that of a complaint arising from a cause decidedly

opposite. Rest, of course, and freedom from exposure, are obviously necessary; and stimulants, though medically proper, must be carefully avoided, except under the guidance of a judicious oculist, who will direct galvanism, or ætherial lotions at intervals.

It is a fact, too. that instances have occurred where dulness of sight, and an inflammatory state of the organ, have existed together; not in connection, but distinct, though in local accompaniment. In such a case, it is evident that the indiscriminate use of sedatives or of stimulants would be improper, whilst they must neutralize each other if used together. One complaint, then, must be removed before the other can be acted upon; and it is to the judicious oculist that the selection of priority of treatment must be left.

Unhappily, however, without attending to proper caution, we are too much in the habit of increasing our weakness of sight,

rather than of reviving those organic powers; yet still, I trust that my readers will put in practice the following short rules, which experience has taught me, and of which I am convinced they will soon feel the advantages.

The first is—

That whoever is a long time employed in labour of a very uniform nature, of whatever kind, or in the contemplation of small objects, even in accounts and calculations, accompanied by great and similar exertion of the mind, ought, as much as possible, at proper intervals, to indulge himself in the open air, and to exercise his eyes in the contemplation of distant objects.

To conceive the salutary effects of this simple remedy, it is only necessary that one should experience it; for then he would perceive that this relaxation gives a new vigour to the eye-sight for the ensuing labour, not only in the summer but in the winter also.

In the latter season it too often happens, however, that this relaxation is totally neglected; for, as soon as we rise, we fly to our daily occupation, and the same after meals; and again, in an evening, sit down for two or three hours to cards, which is merely changing the occupation of the sight: or, perhaps, are shut up in an apartment where the fumes of tobacco pipes and of tallow candles produce an atmosphere unfit to breathe in: a practice which even the best eyes must in the end suffer from, even though at first they should be sufficiently strong to bear up apparently against this abuse: but a practice which too often involves the unhappy sufferer in total blindness, or brings on a weakness of sight nearly approaching to it.

A second rule is—

That, after a long and continued use of the eyes, riding on horseback is extremely salutary.

This exercise ought to be performed, not in a riding-house, but in a situation

where the sight may be extended; and it will be found alike beneficial to the health in general, as it is well known to have great influence upon the intestines. It is, indeed, astonishing, that so few people have recourse to this admirable remedy in diseases of the abdomen, but will obstinately persist in the use of medicines, which, though they afford immediate relief, are always followed by an increased weakness, that soon calls for their repetition.

I have already remarked, that one of the causes of the weakness of the visual faculty, often proceeds from a pressure upon the bowels, occasioning obstinate obstructions. Of what use, then, may we not consider riding on horseback, which, by its moderate application, renews and regulates the peristaltic motion, and thereby prevents too great a flow of humours to the head?

We may observe in the third place—

That it is also a useful relaxation, after

a strong and constant contraction of the visual organ, to occupy one's self in the examination of moving objects, which amuse and relieve the eyes without irritating them.

It is on this principle that I have persuaded many distinguished persons in the world of science and literature, and who were in the habit of exerting the visual faculty to a great extent, to devote certain portions of their time to natural history, or even to botanical observations alone, nay, even to procure a series of amusing engravings, in order to return with more ease to their serious occupations. From this may be drawn a fourth rule:

That we ought to consider theatres, and other public places, as very fit means for the relaxation of the sight.

It is a well ascertained fact, that the moving picture of the theatre, the scenery, the animated objects, even the decorations of the stage, together with the striking contrasts which it exhibits, as well as the

parts of the house before the curtain, filled with a variegated audience, all tend particularly to the amusement, and consequent beneficial relaxation of the visual faculty. It must be confessed, indeed, that few things can be worse for the eyes of the audience than the almost insupportable glare of the lamps and other lights in front of the stage; and as this is more particularly felt in the stage boxes, I have often observed with chagrin, the eagerness of the public to exhibit themselves in this situation. I have known many people, also, of weak sight, who have been sensibly affected by this glare, and suffered much inconvenience afterwards in their professions; it were to be wished, then, that these and similar situations in the theatre should be filled only by the idle and the gay.*

* That the world, whilst in pursuit of pleasure, will attend to medical cautions, is not to be expected; it therefore more particularly behoves those who

Another recreation, extremely favourable for the sight, and which, indeed, may be considered as the first of all games, is that of *billiards*. There is none equal to it for the relaxation of the mind also, as

---

have the management of public places, to bestow some care on, and attention to, the comforts and to the welfare of their patrons. I would, therefore, more particularly recommend that an improvement should be made with respect to the front stage lights in all our theatres, as they are not only generally prejudicial to the sight of the greatest part of the audience, but even, in some particular positions in the house, prevent individuals from seeing the stage with any degree of distinctness.

The evil may be easily remedied by the application of a low but long screen of gauze, of a light blue or green, as such colour may best assimilate with the general style of decorations, and which, being placed in the front of the stage, lightly fitted up in a wire frame, will effectually check the glare, without affecting the light with regard to the stage, and, indeed, without being even noticed by a great part of the audience.

The expense of such a guard ought not to operate against its adoption, though it may require frequent renewal.

well as for the health of the body, and a salutiferous exercise of the sight, and even for giving precision to the motions of the hand. Of the same nature, perhaps, with some peculiar advantages, is that of *cricket*, particularly if played on a verdant down, not on a ground whose verdure is worn off by the transit of players and spectators.

This latter game, indeed, is principally a summer one; but I shall here state my last rule, more particularly applicable to the winter, which is,

That whenever, during the latter season, we cannot take enough of bodily exercise out of doors, it is extremely improper for people whose serious occupations oblige them to force the eyes during the day, to engage in sports or games which require them to sit; they ought, therefore, to adopt such whose essence is motion, amongst which billiards, dancing, even battledore and shuttlecock, are of singular benefit.

With respect to billiards in particular,

as applied to the eyes, I must add, that the constant, yet unforced, attention, which the game requires, the rolling of the balls on the green cloth producing incessantly new chances, the continual and moderate motion, (for I speak of playing for amusement, not for gambling), all these contrasts are so beneficial to both mind and body, that we always find our forces renewed after this relaxation; whilst the sight sensibly feels a power of exerting itself anew, and even for a longer period than when our serious occupations had first commenced.

I have often remarked, that some persons imagine that they produce a very salutary relaxation for their eyes, in sitting a couple of hours at drafts or chess; but how is it possible that the eyes can recover their fatigue at a game which fixes us on our chair, at the same time that it requires a great attention from the mind.

Even music, though by candle-light, is preferable to this; but if a person is not

acquainted with that science, a better relaxation will be found in backgammon, which ought, however, to be played standing, at an elevated table or desk. In any of these, nevertheless, moderation must be used, for I have known many instances of people becoming near-sighted from too close attention to games, which have had such an effect upon the sight, that it could scarcely have suffered more from the worst treatment.

CHAPTER VII.

Rules to be adopted by such unfortunate Patients as have lost an Eye.

Long experience has shewn, that people who have had the misfortune of losing one eye have always seen more distinctly, and in a more acute manner, than they did before with both ;* that is, as soon as

* That this is agreeable to true philosophy has been proved by some curious observations of a

they had become accustomed to their loss, and provided that in the early stage of their suffering *they have not treated the remaining eye improperly*. For my own part, I have often noticed this in people,

---

learned German, Œpinus, who, in looking through a hole made in a plate of metal, about the tenth of a line in diameter, with his left eye, found that the hole itself appeared larger, and also that the field of view seen through it was more extended whenever he shut his right eye; and both these effects were most remarkable when that eye was covered with his right hand. This he very judiciously considered as depending upon the enlargement of the pupil of one eye when the other is closed, and which he considered as wisely appointed by a benevolent Providence, in order that, when one eye fails, the field of view in the other may be extended.

The young man who was couched by Cheselden, whose case has been so often quoted by various writers, on being couched of his second eye said, that objects first appeared large to that eye, but not so large as they did at first to the other; and whilst looking upon the same object with both eyes, he thought it looked twice as large as with the first couched eye only.

who for many years had been deprived of one of those organs, and who, notwithstanding their advanced age, have been able to work as well in the finest articles as before their misfortune.

To such people, then, I must more particularly recommend the rules which I have already prescribed for sound and complete organs: it is certain they ought to follow such rules, even more punctually than the others, since they may be said to possess only half the organ; which ought to render them constantly attentive, lest they should lose their sight entirely. Whoever loses an eye by any accident, particularly discovers, as soon as he attempts to make use of the other, a kind of sensation like pulling, or a species of contraction, in the destroyed organ; and the sound eye cannot even support the slightest exertion without becoming immediately fatigued, and having a tendency to fill with watery humours.

These symptoms, as long as they con-

tinue, are an incontestible proof of the weakness of the visual faculty; but they will soon disappear after the simple process of covering the closed up eye with a compress of fine linen during the period of being seriously occupied. However, not to encourage these troublesome symptoms too much, the patient must be careful not to expose the sound eye to a forced exercise of its powers, particularly before the wounded eye is completely cured, and has lost all sensation of absolute pain.

But if any person shall be imprudent enough to neglect this caution, he may be assured that the complaint, instead of disappearing promptly, as it always does by judicious treatment, will remain during his existence, whenever the sound eye shall experience the slightest tension; so as totally to render him incapable of continued employment. Finally, if he is so much his own enemy as to repeat this imprudence after feeling its symptoms, let him remember that the weakness of the

sound eye may proceed so far as that he shall soon be the victim of total blindness.

SECTION II.

ON THE BEST MODE OF TREATMENT FOR WEAK EYES.

I SHOULD have ample matter to enlarge upon if I wished to go at length into the treatment of weak eyes in general; I mean even as addressed to those who are not professionally acquainted with the subject: but, as to the proper and absolute cure of visual weakness, that is the department of an able physician, although its entire re-establishment is often impossible under the best medical treatment; not, indeed, from the inability of art, but because that every patient, even during the process of cure, is unwilling to adhere to the proper and necessary abstinence from the use of his eyes, and too often disposed to make the same use of them that he would in perfect health; so that, in fact, the

cure does not depend so much upon the oculist as upon the discreet conduct of the patient himself.

For this specific reason, then, I must repeat the certainty of the greatest dangers awaiting all those who suffer from a weakness of vision, unless they shall observe with care and attention the prudential rules which I have laid down in the progress of this Essay: but, at the same time, I wish to re-assure their minds, and to free them from apprehension, if they will keep a strict observance of them. Let them not, then, be terrified with the jargon of self-sufficient oculists and advertising quacks, who threaten them with inevitable blindness, unless they have recourse to their specifics, which are, in fact, good for nothing but to enrich the venders, and will always tend to hasten, if not to produce, that blindness for the cure of which they are so much vaunted.

It is a remarkable fact, and ought to be reflected on, before any thing but the

mildest process should be adopted towards weak eyes, that this weakness does not always proceed primarily from any local affection, but from some ulterior cause, sometimes in the system generally, nervous, or muscular; in short, that it may proceed, not from the incapability of the organic structure of the eye to convey ideas or pictures to the brain, but from some temporary incapacity of the brain to receive them as transmitted.

The state of the stomach, also, will often affect the sight, and produce that swimming, or indistinctness of vision, which is generally attributed to the accumulation of blood in the head. In such a case, a change of diet and regimen may be very beneficial, but the advice of an experienced oculist will be necessary to ascertain whether that change shall be to abstinence or to more powerful stimulants.

It ought also to be remembered that weakness of the sight has two distinct

symptoms, an indistinctness of vision, and an inability to bear the usual quantity of light.

When either of these are first felt, so that a person is obliged to look stedfastly at an object, or to keep close the eye against the luminous stimulant, it ought to be noticed, not only to render cure more easy, but also to guard against the unsightly habit of blinking, which is too often acquired; a habit destructive of personal beauty as well as of personal comfort.

The instant, therefore, that he feels dazzled either by small print, by other small objects, by luminous ones, or by snow in winter, he may consider care and circumspection to be necessary, carefully distinguishing whether the sensation is attended with a deficiency, or with an overflow of the lachrymal moisture, for on due attention to this much of the cure must depend.

Should this feeling first be noticed

after illness, and when as yet but convalescent, there is no absolute cause for alarm, as it may be nothing more than the result of the general debility then passing off; but if it comes on in apparent health, both cause and cure must be sought for.

CHAPTER I.

Of the Care continually necessary for the Preservation of Weak Eyes.

THE uninterrupted care, which ought to be taken of weak eyes, differs in few respects from what is laid down for eyes in a sound state, the whole of which rules ought to be observed with strict exactness, and without exception.

Every person troubled with weak eyes is in the habit of always screening himself from the light, but generally in a manner more productive of evil than of good, par-

ticularly if use is made of screens or shades formed of a substance that reflects the rays.

Others, again, place any thing at hand before the light, whilst many put it in a corner of the apartment, in order to avoid its too great brilliancy, which, however, is next to impossible, since at intervals it necessarily happens that the reflexion or augmentation of the rays is caused by any change of place, even by rising up, as well as in walking; without taking into the account that the flame striking suddenly upon eyes unaccustomed to its effects stimulates them too powerfully, irritates, and, in short, weakens them more than by constant action. In general, those afflicted with weak eyes can better support a light equally diffused, though great, than that of a single candle; and I have often had occasion to notice a curious fact, that a lighted candle during the day is more insupportable to the

weak-sighted than during the evening. From these premises proceeds the first rule, which is,

That those with weak eyes ought never to shun the light; but merely, when obliged to sit near a candle, to soften its too great brilliancy, in order to prevent that obstinate irritation which it may produce.

This purpose is best accomplished by means of a portable screen, or *paralumière*, of green silk, which may be so placed before a candle, as not to be inconvenient to the rest of the company.

In spite, however, of this precaution, a person is not entirely guarded against such things as are hurtful to a weak sight, particularly if mixing with those who are brilliantly dressed, or sitting in apartments fitted up with brilliant decorations, which are powerfully destructive of weak eyes.

If any one doubts of the prejudicial effects which brilliant or glittering objects have upon a weak sight, I shall convince

him of the truth of it, by reciting an instance which took place with respect to a very worthy man whom I knew well. This person, from an idea that most kinds of food had been attended with prejudicial effects to his eyes, deprived himself of the use of them all without scruple, and seemed rather disposed to encounter hunger itself, than to risk an approaching blindness, which threatened him; but this care, extended to a period of two years, was not only useless to him, but, in fact, had reduced him to a state of weakness that was alarming. Continued and trying labour, during his youth, had brought his eyes to such a state, that he no longer believed them capable of cure; however, his profession was one that obliged him still to persevere; and his distress was great in not being able to attend to it on any particular day, when he had taken supper on the preceding evening. It was natural, then, that he should attribute the augmentation of his complaint to what he

had eaten, although he had always taken the necessary precautions during the night, to procure a good digestion; he therefore resolved to eat no more during the evening, and from that moment a sudden change took place in his visual powers; the weakness, indeed, remained, but, nevertheless, he was still able to encounter a moderate degree of labour. It happened one evening that I was introduced by a friend to a party from which the master of the house was absent; but as they staid supper, and the party was a family one, he joined us, notwithstanding his apprehensions of the effect of the repast. In short, it was the very person of whom I speak, and whom I now saw for the first time: he slightly hinted to me his sufferings, when I observed, that he need not be surprised if his eyes should be ill after such a supper as that before us, when the table was covered with such a number of brilliant objects as could not fail to have some effect even upon the soundest organs.

I added, that he had nothing to do but to banish every brilliant superfluity, and that he would then find that no indigestion would ensue to injure his sight. He listened to my advice, put aside his brilliant supper equipage, fixed shades to his lights, and at the end of two years, honestly confessed to me, that he had never found himself in better health. He continued to indulge himself in a moderate use of all aliments; his body recovered its strength, and the troublesome state of his eyes entirely disappeared.

It is thus that any person may himself discover, if he chooses to pay a little attention, the causes of his complaints, and the various objects which are troublesome to a weak sight, and which he may thus remove before they make a dangerous impression.

That to which a marked attention ought to be paid is, never to press or urge the eye too much in such cases; for by that it becomes more susceptible of admit-

ting the rays of light, since that action distends the pupil much more than can be regulated by the gradual closing of the eyelids.

From what I have thus said respecting the treatment of weak eyes, and the irritation of light, results the second rule—

That people with weak eyes, whenever they are obliged to travel in a deep snow, should do their utmost to guard against the impression of a reflected light; as such a circumstance has often had the worst effects even upon sound eyes, which have often experienced a remarkable degree of weakness from this very cause.

The best preservative on this occasion is a black and very thick crape, which, however, need only cover half the face; which will also be found equally useful in sandy roads on a bright day.

Another consideration, forming a third rule, is—

That weak eyes require washing, and being neatly kept, much more than sound

ones; at the same time that they are less able to support the use of cold water.

It will be asked, how those unacquainted with this department of medical skill shall be able to determine at what times it will be proper to bathe their eyes in cold water? to which the answer is simple: for whenever we find a great difficulty in opening or shutting the eyes, or that the eyelids are so strongly attached that they press on the body of the eye, and produce a painful contraction; then, in such cases, the weak eye cannot support the application of cold water without being exposed to the danger of a malignant and obstinate inflammation; but if the weakness of the eyes is not accompanied by those unpleasant symptoms, then the use of cold water, or of luke-warm water, under proper advice, will always have a happy effect, equal to that experienced by sound organs after suffering from any degree of tension.

As to that not uncommon complaint of the "watery eye," which often produces

indistinct vision, it will always require the aid of a scientific oculist; except when merely arising from temporary inflammation. Then the cure of the inflammatory complaint is perfected by mild astringents, or even by cold water alone.

But it must be noticed, that the usual mode of applying liquids to the eye, by means of a piece of linen, seldom answers the purpose, because the lotion is not brought into immediate contact with the diseased part. The use of the glass, therefore, where the complaint is deep seated, must appear evident; or else the application by means of a camel's-hair pencil. In the application of all lotions, the head ought to be reclined towards that side where it is particularly wished the lotion should penetrate, opening and shutting the eye to assist in the operation.

Let it still be remembered, that the precise state of the eyes ought to be well ascertained, previous to the adoption even of the simplest remedies; and here I wish

specifically to point out, that dulness of sight ought also to be distinguished from weakness: more particularly so, because it always proceeds from a diminished sensibility of the organ, whilst weakness may arise either from excess or diminution, locally, or remotely. In this case, the sufferer will do well to reflect, and to ascertain with accuracy, whether the confusion, or if only indistinctness of vision, comes on at once, or after a continued exertion of the organ.

If he finds that a gentle rubbing of the eye affords temporary relief, he may consider dulness, rather than weakness of the organ, to be his complaint. In fact, that the eye is rather in want of excitement, than unable to bear it.

He may also be aided in his research by the observation of any judicious bystander: for, if on the sudden application of a strong light, the iris displays little activity of contraction, and little aptitude to motion, the case of dulness will be

evident; more especially if the sufferer is advanced in life, or even if young, provided he has been in the habit of forcing his eyes to exercise on minute objects, or by constant attention to reading, or to any mode of industrious application.

Let it be remembered, also, that general debility of the constitution may bring on dulness as readily as weakness, by destroying susceptibility, as much as by superinducing nervous complaints.

CHAPTER II.

On the Regulation of Exercise for Weak Eyes, both in general and in particular Cases.

ALMOST all people, who are affected with weak eyes, rejoice at the approach of twilight, whilst their complaint has a great effect upon them at night: but they are ignorant that in the morning the state of their sight requires a particular care, since then it is not capable of suffering the smallest tension; and that even on the

slightest imprudence may depend the good or bad use which they can make of it during the day.

Before, then, that the cloud which swims before their eyes in the morning, to which I have already alluded, shall have been quite dissipated, it is improper to think of sitting down to any kind of labour, unless it shall be strictly proportioned to the visual powers; and it must be specially observed, that we ought to avoid every kind of occupation which, in addition to the tension of the sight, shall require the attention of the mind.

Still, it must be remembered, that these points require as much solicitude during the day, and cannot be too much attended to. Even eating and drinking are important considerations; and our aliments, in either case, ought not to be of a heating nature.

Most people of weak sight imagine that they can ameliorate it by the use of spectacles, and are firmly persuaded that

their use improves and fortifies it: others go yet further, and imagine, that since green silk has such beneficial effects upon the eyes, so green glasses cannot fail to have the same influence.

Green spectacles, on the contrary, are extremely hurtful, not only whilst occupied, but at all other times, inasmuch as they represent objects different from what they are in reality, giving them a dark and obscure outline, by which the weakness of the eyes may absolutely be increased, instead of being diminished.

In fact, green glass windows, where they can be adopted, are both better and even more convenient for the eye. Even a portable frame, filled with green glass, may be used with great satisfaction, if interposed between the light and the book when we read; whether by night or by day.

CHAPTER III.

On the Choice of Labour or Employment most judicious for Weak Eyes.

One of the most beneficial rules in the choice of occupation for weak eyes, is that of executing during broad day-light, whatever in our profession or employ may demand a strong exercise of the mind along with tension of the optic nerve; reserving for the evening, as much as possible, such parts or departments as are of a light and easy nature: observing too, that, when we read for amusement, it is proper to select a type which does not dazzle or confound the eyes, and paper of a bluish cast, rejecting all that is of a brilliant whiteness.

Unfortunately, we are but little able to attend to the latter caution, since, for a long time past, under the pretence of improving the types, they are daily rendered more unfit for weak eyes. It is true, that

extraordinary neatness is given to the new founts of letter, so that its fineness, together with the beauty of the paper, render our modern letter-press extremely brilliant; but all this is to the manifest injury of the visual faculties.

Even with the strongest sight, any one will be convinced of the evil, by only two hours constant reading. In this respect, the old black letter, or the common German type, has a great superiority over the Roman character: but the stereotype is, in my opinion, the most dangerous of all. From the latter a considerable degree of inconvenience is felt, even by those who can read for three or four hours successively in the common print without any cause of complaint. It is vain, however, to cry out against it, for whilst fashion rules, that mode of printing which is easiest and most convenient for our eyes will be totally neglected, and give place to those modes which are certainly more

elegant, but much more destructive to the sight.

I will not deny that these embellishments appear to please the eye; but, on the other hand, it will still be allowed, that our eyes are soon fatigued by the continued roundness and fineness of the strokes of these types; and I am convinced, from actual observation, that there are many persons who have already paid dear for the pleasure, by a weakness of sight sometimes incurable.

I mean not here to forbid all reading, (though I wish that the public would not give the preference to this type to the utter exclusion of the others), no more than I wish to detract from the merit of the inventors of the stereotype:* all that I have said of either is merely as a warning to the weak-sighted, in order that

* This, indeed, can hardly be called an *invention:* the first printers used blocks: *types* were an improvement in the art.

they may be on their guard against a course of reading in books printed on that plan solely. Such ought also to avoid writing too small and too close, as that practice cannot fail to add considerably to the evils of near-sightedness and obliquity of vision.

It has been remarked, that diseases, like empires, or like fashions, have their revolutions; or, like comets, make their appearance at times unexpectedly, and out of the general order of things.

Of this, there is an existence in the morbid sensibility by which numbers are now affected, under the general title of weakness of the sight, but differing in various patients in its symptoms, which sometimes baffle the discrimination of the ablest oculist; and which, perhaps, can only be adequately treated by an accurate investigation of the various causes that have led to the disease.

It has too often been supposed that debility was the general cause, and thence

have tonics been generally applied ; sometimes with success, it must be granted, but too often with the most pernicious consequences. My fair readers may, however, often be their own oculists in this case, as I have elsewhere noticed, merely by leaving off those dazzling or minutely ornamental white works, which have brought it on.

Some relief may, indeed, instantaneously be received by bathing the eye, provided there is no other morbid affection, with a soft sponge dipped in luke-warm water ; but a more pleasing mode of cure may often be found, merely by exposure to a genial air out of doors, or by contemplating the variegated parterres of the flower garden.

CHAPTER IV.

On the Species of Relaxation most proper for Weak Eyes.

Every person of weak sight ought to be scrupulously attentive in this particu-

lar; yet I have seen many who, though extremely careful respecting whatever might hurt their eyes during occupation, have ceased to think of it in their moments of recreation, and by that means have actually been incapable of resuming that occupation, to which alone they have attributed the results arising from their own negligence.

I wish particularly to speak here of card-playing, one of the most recreative certainly, and most common amusements, but which may, nevertheless, become extremely hurtful, from the glaring and mixed colours of the cards, particularly when a person has been much occupied during the day; to which we may add other games or sports that can only be played whilst sitting, and which of course are not more salutary for the body than for the eyes.

Dancing too, although at times it may be salutary, is yet, as well as all other exercises that warm the blood, to be

adopted with great caution: in the first place, because that the fatigue of the body, and the effect of the volatile dust which results from it, affect weak eyes, and unfit them for their office on the ensuing day; so that this amusement, when improperly persisted in, has induced a weakness of sight extremely difficult to cure: and, in the second place, because that, by too much exertion, what was simply weakness, may be changed into total blindness; a fact which some may choose to doubt, but of which I have met with more than one instance in the course of my practice.

As to other points, those visually diseased have only to refer to, and follow punctually, the rules which I have already laid down as guides to persons in perfect health, upon this branch of the subject.

CHAPTER V.

On the Conduct which ought to be observed both by the Long and Near-sighted.

Most people are subject, in old age, to a great heaviness of sight, in consequence of the pupil becoming flattened, and the little transparent membranes, as well as the vitreous and aqueous humours becoming more thickened, whilst the retina, at least in almost numberless instances, becomes much distended. At such a period, if they are careful in the choice of their spectacles, they may, in some measure, stop the progress of this dangerous affection of the visual faculty: but too many are there whom a false shame, particularly in the fair sex, reduces to incurable weakness.

We may also become near-sighted in advanced age, after having been too much accustomed to examine minute objects, which can only be seen through a micro-

scope; and of this I could adduce many instances.

It has been asked, "Why do we see so many near-sighted people among the higher ranks, and why do we meet with fewer among the middle classes of society, and scarcely one among the agricultural class?" These questions have been so often put to me, that I feel a desire to answer them in this place: and I can aver, from a constant and scrupulous experience which I have had amongst the near-sighted, that I have had sufficient reason to be convinced, in addition to what has been already said, in Chap. II. Sect. 1, that there exists an infinity of causes, more or less powerful, which more particularly attack individuals of the first and second classes, with whom, indeed, the principle of the disorder may be said to be implanted in their infancy and early youth. In short, the close state of their sleeping apartments,

screened against the atmosphere, their little playthings, and often the want of due air and exercise, from mistaken tenderness, all dispose the infant to become near-sighted: indeed, it is also owing to the ignorant inattention of nurses and nursery maids, who, either from their own will, or from the directions of indiscreet parents, neglect all care upon this point.

We are astonished, it is true, and consider it as a phenomenon, if we hear a child of six years old prate for whole hours upon some trite points in the Greek and Roman history, while, at the same time, he is totally ignorant of the history of his own country, and of his own family, if he belongs to one of any antiquity. If the poor child, then, can also shew his premature talent of chattering a few unmeaning compliments in French, he is considered as all accomplished: he is, of course, permitted to dedicate the rest of his time to the dictates of his own fancy, and to his playthings, and his pockets

filled with money, until indulgence becomes his ruin.

We may easily deduce from this, how infants, who are forced to an early straining of their sight in reading, as well as encouraged in the contemplation of small objects, must accustom themselves insensibly to examine objects close to their eyes. In fact, we ought rather to ask, why there are so few near-sighted people amongst the affluent, than why there are so many?

In the lower classes, indeed, the parents cannot afford to instruct their little ones elaborately, though they may send them to school just to keep them out of harm's way, but permit them, during the early years of infancy, to run about the fields, or in the open air of the streets, on which account their eyes are seldom contracted; and seldom being distended, except to contemplate the greater features of Nature, they preserve always the same vigor. On this principle, it is easy to conceive

why we meet so very few near-sighted people amongst the lower classes, with the exception of those engaged in particular manufactures, and scarcely any amongst the peasantry: and hence also we trace the causes of this malady in others, particularly when the weakness of their constitution has given them the slightest tendency to complaint.

Every near-sighted person who has the resolution to deny himself, as much as possible, the use of optical lenses, may gratify himself with the well-founded hope of finding the state of his eyes much ameliorated at thirty years of age, and of lengthening his point of view about forty, This, however, requires great constancy and forbearance; but may still be attended to, if the patient will recollect that the use of glasses can only give a temporary relief, whilst, at the same time, they confirm and increase the morbid state of the organ, until at length the eyes absolutely require lenses of further powers; and an

old age of comparative blindness is sustained from a misplaced indulgence to a deficiency, which otherwise would have been gradually, though slowly, removed.

I do not, however, entirely forbid the use of glasses to the near-sighted, because I know it will not be attended to; but let them use only one glass at a time; let them shift its use to the eyes alternately, and let them, as much as possible, do without it: and even then, they may still hope for a certain degree of amelioration in the visual faculty, as the partial use of a lens will not be able entirely to counteract that change which Nature is producing by a change in the convexity of the eye itself.

It may be useful to the near-sighted to know whether they absolutely require the adoption of spectacles with concave lenses; I shall, therefore, give them the following rules:

First, when the whole of the pupil of the eye, and, above all, the transparent tunic,

is so much elevated, that it can easily be perceived when the eye is looked at horizontally.

Second, when the patient writes very small and very close, and, particularly when wishing to write a larger hand, the letters are ill-formed, unequal, and his lines uneven.

Third, when in the evening, at the close of day, he can distinctly read the smallest print, whilst those of a sound eye-sight can scarcely distinguish capitals.

Fourth, when he can scarcely recognize any person, though only ten paces distant.

And, fifth, when, to fix his view on any distant object, he is obliged to half close his eyelids.

Even with all these symptoms, the patient ought to examine carefully whether the glasses he adopts are really beneficial to his eyes, an examination which he ought to regulate by the principles I have already laid down in the first section of this Essay, particularly avoiding those

concave lenses which diminish objects, and only using those which represent them clearly defined; for these diminishing glasses are not only prejudicial to the malady itself, but even affect the eyes in other respects in a material degree.

He who wishes to avoid *myopism* in more advanced life, may find considerable benefit from the adoption of a simple rule, which is, never to regard with a fixed attention such objects as are at a great distance, though a partial exercise of the sight in that respect is salutary.

CHAPTER VI.

On the Treatment proper for the Eyes after severe Illness.

It is well known, from general experience, after any severe illness, and particularly after inflammations which have drawn off too many humours from other parts of the body, as well as after nerv-

ous complaints, that the eyes become so weak as to be almost blind, or at least to give the patient a well-founded alarm for the safety of his visual faculty. In such cases the patient is too apt to apply himself to some boasted strengthening remedy, some species of quackery, which infallibly increases the disorder it professes to cure.

This weakness, however, may be easily removed by simple means, and the most pernicious consequences prevented, if the patient will merely guard his eyes, for a very short space of time, from any violent contraction; that is, generally speaking, until his health, in other respects, is re-established, his bodily powers renewed, and his whole frame capable of undergoing its usual exertions. Of course, nutritious food, which does not heat the blood, but strengthens the system gradually, is all that need be particularly recommended to this class of patients.

One of the greatest abuses to which a

person can give way after recovery from severe illness, and which I have often seen produce a species of cataract, arises from people in a state of convalescence not being well able to pass their time without reading, both morning and evening, so that whilst recreating the mind, they attack both head and eyes.

To re-establish, with the greatest promptitude and certainty, the eyes after severe illness, it seems then most necessary that we should, from time to time, try their powers, so as to accustom them by little and little to their proper functions, by means of an agreeable exercise, so that we may, at length, amuse them by an examination of the moving picture of varied objects, but without fatiguing them by an application too uniform, and devoid of temporary relaxation. Of the good effects of such conduct, I have met with several instances; in one particularly, of a worthy friend, who, after a nervous and catarrhal fever of consider-

able duration, was attacked with such a serious weakness of sight, that he was very justly alarmed with the apprehension of losing it entirely. His anguish was much augmented by a tenderness of the brain, which tended not a little to increase the weakness of the eyes, so much so, indeed, that when I was called in I found my patient in the most deplorable state. His friends had placed him in a darkened apartment, where they had most injudiciously quacked him with various boasted remedies: all these I immediately changed, and my first object was to prescribe for him a solid and nourishing diet, accompanied by cheerful company at his meals, then a glass of good wine, moderate exercise in the open air, and, finally, the use of a clear and equal light. He continued this simple regimen for some time; and, in the agreeable society of his family and friends, soon forgot his disorder, which totally disappeared; in fact, at the end of three weeks, although he had

been taught to fear the approach of a *gutta serena*, his eyes were soon as good as before his illness, and equally able to support a continued degree of tension.

Those disorders, which are for the most part followed by a particular weakness of the eyes, and which invariably demand a specific repose for that organ, are not only those of an inflammatory and catarrhal nature, but also plethoric complaints, and scarlet fever, small-pox, and the measles most particularly; which latter, in grown persons, are always attended by a lengthened weakness of sight, often so obstinate, that the convalescents cannot undergo the slightest occupation without the eyes becoming red, watery, and extremely sensible of pain.

This weakness also ensues after blows on the head, and after dangerous falls which shake the brain, thereby occasioning the most fatal consequences; particularly if the eyes are improperly treated during or after recovery.

I might here give many additional rules to be adopted in such cases, but as several distinguished oculists have discussed such subjects in a scientific way, whilst this Essay is intended merely to treat the subject in a popular manner, I find it unnecessary to proceed further.

SECTION III.

HOW THE EYES OUGHT TO BE TREATED IN CASES OF UNFORESEEN ACCIDENTS, BUT WHICH ARE NOT OF SUCH IMMEDIATE IMPORT AS TO REQUIRE ANY PROFESSIONAL OPERATION.

CHAPTER I.

Of the best Mode of Expulsion of any extraneous or foreign Matters which may intrude between the Pupil and the Eyelid.

It often happens that a sudden gust of wind shall drive extraneous matter into the eye; and many artisans have their eyes attacked by small sparks of iron,

pewter, silver, or gold, which is too often attended with very improper treatment.

The first thing done is, generally, to rub the eyelids with the hand, a thing which seldom takes place without unpleasant consequences, never failing to bring on a degree of inflammation, and sometimes even causing the loss of an eye ; since, by this inconsiderate rubbing, the person risks the forcing of the substance, with its angular points, into the body of the eye, and which it is thus impossible for an operator to extract without considerable injury.

As soon, then, as any extraneous substance, of whatever nature it may be, has got under the eyelids, and that it painfully affects the eye, either by its inherent qualities, or by the sharpness of its form, whether quick-lime, dust, insects, or pieces of metal, it may be generally expelled merely by raising the upper eyelid, and leaning the head forward; if possible, it is best for the sufferer to do this himself,

as his own sensations will prevent him from doing it too forcibly. In keeping thus the eyelid elevated, and the eye quiescent for a few moments, one feels a flow of tears starting from the organ, which does not fail to bring along with it the cause of the pain, whatever it may be, or at least to carry it towards the corner of the eye next to the nose, from whence it may be removed by a small piece of linen folded to a point, or even by the corner of a handkerchief.

If this operation is not sufficient, then a finger ought to be passed frequently, yet gently, over the eyelid, from the exterior corner of the eye towards the great canthus, or interior corner, by which means the substance is made to descend towards the lachrymal glands, from whence it may be drawn by a very fine hair pencil.

But if this latter resource should fail, then the upper eyelid must be taken as

before, and kept elevated as much as possible; and the eye being then turned towards the nose, a small hair pencil, dipped in cream, must be introduced between the eyelid and the body of the eye, beginning at the little canthus, or exterior corner, and ending at the interior corner; in doing which, the extraneous matter cannot fail to be extracted.

This latter operation is, indeed, best performed by another person, as he can more readily discover the place into which the substance has retired. For this effect, the patient ought to be placed in a chair near the light, his head resting backwards, and he himself holding the eyelid in a state of elevation, in such a manner that the person operating shall only have to pass the pencil lightly over the place where the substance lies, and which he may thus instantly extract. By this method the patient will suffer less than if he attempts to perform the whole himself;

and any person can perform the additional part, which requires but little understanding.

As soon, then, as the person feels that the piece of glass, or of iron, or whatever it may be, is attached to the tunic covering, and will not yield to the pencil, it is absolutely necessary immediately to have recourse to an oculist, who can be depended upon, as otherwise such an accident may be attended with the loss of an eye.

If the substance introduced into the eye should, however, be quick-lime, or vitriol, or snuff, or pepper, it is necessary then to pass a larger pencil than in the preceding cases, which ought to be dipped in fresh butter; and, in the mean time, a professional man ought to be sent for, in order to complete the operation, such being only preparatory, but indispensably necessary, in order to check the morbid effects of the foreign substance. Indeed, if the patient is obliged to wait only a

quarter of an hour for this fresh operation, all the parts of the transparent tunic which may have thus been too long affected by the action of the foreign body, will grow thick, gather up, and become totally opaque.

I must here strongly warn my readers against attempting to remove those deleterious substances by friction, or by bathing the eyes, for this, in effect, only spreads them the more, and produces greater danger for the eye. They ought solely to attend to the introduction of some oily matter, such as fresh butter, or cream, which may thus, for a few moments at least, check the acrimony of the foreign matter.

It often happens, that when any extraneous body is introduced into the eye, then such a powerful contraction is experienced, as to render it impossible to open of itself: in such a case it is indispensably necessary to call in a skilful perator, if we wish to prevent the most

fatal consequences; for he who is not a professional man, cannot render the least assistance, whatever his general knowledge may be.

Here I cannot sufficiently blame the inconsiderate custom of introducing *another* substance into the injured eye: I allude to crabs' eyes, and such quack remedies, which are too much in use amongst the ignorant and vulgar. I have met with patients who have kept these substances in their eyes for two days before I saw them; and surely, no one will be surprised that such absurd conduct should be followed by the most obstinate inflammations.

We may also observe, that whenever any substance falls into the eye, however small it may be, and however short the time it may remain, it is always succeeded for a few hours, sometimes for a few days even, by a degree of redness, and by a painful sensation both from air and light; but

this may be guarded against, if the eye is frequently bathed in fresh water *after* the extraneous body is removed.

In regard to accidents endangering loss of sight, it must be remembered, that some of the most trifling kind, but to which people are most exposed, have been known to be almost instantaneously productive of cataract.

Going into the heated stove room of a manufactory has produced instant cataract in both eyes. This shews that reading by fire-light, or exposure of the eyes to the glare of a hot fire, must be pernicious; and, in its degree, the strong action of a candle or lamp upon that organ. Again, exposure of the extremities to wet or cold, especially in an incipient or convalescent gout, has produced cataract.

Even a slight stroke on the eye from a branch, whilst passing through a thicket or shrubbery, has had the same effect.

Excessive weeping, in the course of one

night even, has been the origin of blindness: also sudden exposure to a cold atmosphere, after inebriation.

Swelled eyelids, especially in children, ought to be carefully guarded against, and remedied as soon as possible; because the matter formed inside is prevented, by them, from wholly running off; this increasing inflammation producing ulcers or specks, even to the entire covering of the pupil: nay, instances have occurred where it has destroyed the transparency of the outer membrane, even by the constant maceration, independent of its acridity, so that the membrane has burst, with a discharge of humours producing a sunk eye, which can never be recovered.

As swelled eyelids sometimes proceed from violent crying, not, as may be supposed, from the stimulus of the tears, but from the anatomical mechanism of the eye, the tunica conjunctiva, or inner surface of the eyelids, being forced by the correspondent action out of its place, and

retained in that position by a cartilage, called the tarsus, it naturally follows, that emollient applications must be injurious, as they increase the debility and relaxation which originally cause the protrusion of the membrane.

Let tonics then, and mild astringents, be applied; preferring, before all others, a mixture of hog's-lard with the curds of milk, which has been turned by means of an aluminous solution.

Bandages must not be used to counteract the muscular or membranous tendency; but camphorated compresses, in regard to infants, may be held upon the eye until the proper tone is recovered.

CHAPTER II.

Treatment of the Eyes when stung by any Insect.

Wasps, bees, and, above all, gnats, sometimes sting the eyelids so forcibly, as well as bugs, that a great inflammation,

with much swelling, ensues, so as to make it painful, and often impossible, to open the eyes. In such cases, the first object is to ascertain if the sting is left behind; and if so, to extract it with a small pair of pincers, or an etui. Beyond that all friction is dangerous, and will produce inflammation: but some salt or vinegar, or both, should be added to a little water, in which a piece of brown paper may be steeped, and then applied upon the eyelid, in form of a compress, which will dissipate any incipient swelling.

I have several times seen a considerable and painful swelling take place on the eyelids, from the injudicious handling of cantharides, which, however, has been removed in a few days by the frequent application of a similar piece of paper, dipped in four ounces, or quarter of a pint of water, in which a drachm of spirits of camphor had been mingled.

CHAPTER III.

Treatment of the Eyes when any Contusion has taken place in their Vicinity, and also when a Wound has bled.

After a blow on the region of the eye, it generally happens that it becomes violently inflamed, and the eye itself so red, that a casual observer might suppose it lost for ever. The chrystalline part becomes so bloodshot and discoloured, and the extravasation is sometimes so great, that it seems little more than a mass of blood: an appearance too which takes place, not only from a stroke on the eye itself, but even sometimes for a long period after a contusion above the eye, causing an effusion from some of the finer blood-vessels. In such cases, the assistance of professional men is absolutely necessary: but if the patient does not feel any remarkable pain in the region of the affected eye, and only experiences a slight and momentary contraction, medical as-

sistance may, perhaps, be dispensed with, as such symptoms will generally disappear by the application of the following lotion, into which the compress used must be dipped whilst in a tepid state:

Two drachms of rosemary leaves, quarter of a pint of red wine, and an equal quantity of boiling water: let it infuse for a quarter of an hour, and strain it through a piece of fine linen or muslin.

Whoever, in such a case, shall be careful to bathe his eye frequently with this lotion in a tepid state, will soon perceive that the redness begins to clear away: and, if he finds no occasion for any other remedy, he may add to this a few drops of spirit of sal ammoniac, repeating the operation of bathing until that the blood-shot symptoms shall disappear.

This treatment will, in general, be sufficient, after an obstinate cold, or any trifling injury done externally to the eye, so as to produce extravasation of blood in the tunic covering.

Inflammatory affections of the eyes cannot be too much guarded against, even as to present suffering and inconvenience; because they always impair the sight, if it were even from no other circumstance than the superinduction of debility.

Yet so great is the variety, as a late eminent oculist has observed, in the appearance of inflammatory symptoms, that there is ample scope for exercising the judgment; and, we may add, for error to creep in, unless the judgment is exercised carefully.

Though we do not profess medically to lay down precise scientific rules for the cure of inflammation; it is, nevertheless, within the scope of our plan to point out what must be hurtful. In this respect, then, we at once advise our readers to discard all plaisters or compresses over the eyes; for these only irritate more by confining the tears, instead of actually stopping them. Indeed, it must be added, that where the pressure is very tight, the ob-

struction to the general action of the minuter vessels becomes so great, as to produce the most deleterious effects.

A shade will always be more beneficial than a compress: but the most permanent relief will be found in seclusion from the stimulus of light, and of a bleak or biting atmosphere.

If a more powerful remedy be required than that which I have just mentioned, then Gowland's lotion may be applied; but if the case is obstinate, I would recommend, under proper caution, the prescription of a late eminent oculist, who says that he has found a solution of corrosive sublimate, dissolving one grain in four ounces of water, useful even in removing films and excrescences, if superficially situated. Where it does not act to this extent, it may, under judicious directions, be applied to abate that heat and itching of the eyelids, to which many persons are liable, especially those who read or work much and late by candlelight.

Where the inflammation operates so as to prevent the ready opening of the eyes in the morning, no force ought to be used, but the eyelids gently rubbed with the finger dipped in a warm mixture of milk and fresh butter, which will gradually soften and remove the incrusted matter.

CHAPTER IV.

Of the Treatment of the Eyes after any sudden Stoppage of the Perspiration of the Face.

It has happened to me more than once, to be called in to patients whose complaints could only be attributed to a sudden condensation of the perspiration of the face, or to the repercussion of a cold sweat taking place when the patient had been exposed to a current of air, or had bathed his head and face in cold water whilst in a state of sensible perspiration. In these cases a swelling, with inflamma-

tion of the borders of the eyelids, had shewn itself almost instantly, particularly upon the superior ones. The patient, it is true, did not feel any other inconvenience than that of not being able to open his eyes with his usual ease: the disorder even was not of serious importance in itself, but still a remedy was necessary. This consisted in nothing more than in putting over the eyes a small bag of elder flowers, well dried, and of the flour of peas, all pretty warm; also applying a liquid solution of camphor to the eyelids before the small bag was attached. This simple remedy removed the complaint in a day's time; but whoever shall be imprudent enough to wash his eyes with any irritating lotion, may be assured that he exposes himself to the most dangerous consequences.

What cannot be doubted is, that any attempts to give a sudden relief in complaints of the eyes are always prejudicial to the sight. If, therefore, the symptoms

should have any tendency to resist these emollient remedies mentioned, it will be proper that an oculist should be called in; for then to depend entirely upon the simple means laid down would be to risk the sight itself, as such disorders as spring from an absolute repercussion of humours require, in general, he most scientific treatment.

CHAPTER V.

Treatment of the Eyes during and after the Small-pox.

It is difficult to conceive, unless through experience, how inconsiderately the eyes of children are treated, even by professional men, during the small-pox, though these instances are necessarily less frequent since the introduction of vaccination. If, then, the natural disorder, either through misapprehension, or through wilful obstinacy, is still to be

permitted, nay, encouraged, to spread its ravages among us, it must be of some value to ascertain a proper method of treatment, particularly when that is founded upon many years experience. I shall therefore offer to the public a few hints, of the success of which my fortunate practice has convinced me, as being extremely conducive to the prevention of the baneful effects of that disorder upon the visual faculty.

It is a striking and a general observation, founded upon experience, that innoculation is the safest mode of acquiring the disorder itself; for disorders in the eyes of the innoculated bear no proportion to those which follow the disease in a natural way.

During the whole course of my practice in infantine complaints, I have met with numberless instances of disorders of the eye, arising from obstinate inflammation, in consequence of the natural small-pox, many of which, either from the

carelessness and ignorance of the nurses, or else through the malignity of the complaint, have been totally incurable, and a great proportion been attended even with the loss of sight. At the same time I can aver, that, during the same period, I have never met with but one instance of an inflammation of any importance after innoculation, and that yielded readily to the ordinary course of treatment In this statement, I am borne out by several eminent oculists, by whose practice it has been confirmed.

The precise period, at which these effects of the small-pox shew themselves, differs much in different subjects. Sometimes they appear during the suppuration, but most commonly before the pocks or crusts are dry, though not unfrequently a long time after the disorder itself is gone off. In fact, sometimes at the distance of five or six weeks after recovery, I have seen a new complaint break out, which may be called the posthumous one, but

which is, nevertheless, more dangerous for the eyes than even the small-pox itself.

Sometimes this fresh attack has made its appearance after the use of the tepid bath, which I had ordered on account of a purulent inflammation of the eyes. Upon the whole I am convinced, from a great number of observations, that, if the eyes of some patients are affected *sooner* or *later* by the dregs of the disorder, it depends principally upon the particular constitution of each, as well as upon inattention and carelessness during the crisis of the malady.

One of the most pernicious prejudices, and to which alone might be attributed most of the indispositions of the visual faculty after this dangerous disease, is the old error, which, I am sorry to say, still exists, and is even kept up by those who boast of being regularly bred; I mean the custom of blindfolding the patients, by bandaging their eyes during the space

of some days, and thus keeping the eyelids close shut, under the idea that even to open them would be particularly dangerous. From this more than madness, however, it not unfrequently occurs, at the end of a few days, that the poor sufferer is found blind of one eye, perhaps of both, when permitted to open his eyelids, a circumstance which we may rationally believe would not have happened, if the indisposition of the visual organ could have been known and treated properly, as soon as the symptoms began to display themselves.

Whoever will follow scrupulously the subsequent advice, during the illness of his children in this disorder, may be assured that no posterior or troublesome symptoms shall be likely to appear, or at least very rarely: and even though the small-pox should be of the confluent and most malignant kind, and occasion either the one or the other indisposition spoken

of, they will neither be violent, nor obstinately resist medical aid, which now is too often the case.

As soon as the small-pox begins to retire, the eyes should be frequently bathed during the day, whether there is any swelling of the eyelids or not, with a lotion composed of a quarter of a pint of rose water, a drachm of gum arabic, and thirty drops of laudanum.

If it should nevertheless happen that a swelling takes place in the eyelids, and that a viscous seriosity shall exude so as to keep them shut, it will be necessary to have them continually wet with this lotion, endeavouring, at the same time, to keep them half open, which may be effected by means of a glimmering light, as the irritation of a broad light, or glare, would, at that period, be of itself sufficient to superinduce inflammation. It must also be observed, that the most fatal effects may be expected, if we attempt forcibly to separate the eyelids asunder;

and this is the less necessary, because, if they are only half open, it will be all that is required for the injection of the prescribed lotion, and for the discharge of any acrid or tenacious humours which may collect under the eyelids. Attention must also be paid to see if the eye is red, or if the tunic is tarnished or discoloured; for, should either of these symptoms appear, then medical assistance is absolutely necessary. This precaution is so important, and speedy relief so essential, that such examination should take place at least twice or thrice per day.

If it shall happen that the humour collected between the eyelids and the eye is so tenacious, that the above-mentioned lotion is not sufficiently detergent, it will be necessary to perform the injection in another manner, that is to say, in beginning at the little canthus, or exterior corner of the eye, and gradually continuing it all along the edge of the eyelid on to the greater corner of the

organ, and when the humour is thus propelled, in drying it up with a piece of soft linen rolled up. It ought to be noticed also that the pipe of the syringe must be very long and very small.

If it shall happen that the small-pox goes off very slowly, and that a swelling of the eyelids and an acute pain of the eyes take place, then it will be necessary to put the patient twice a-day, and for an hour at least each time, into the hot bath; an operation which must be repeated, taking care that the water shall reach to the head and to the vicinity of the eyes, as well as over all the principal parts of the body; and, in such a way, I consider the hot bath as one of the most useful specifics in disorders of the eyes.

Whenever a patient has his eyes affected, it is proper to procure for him a free and pure air, and as warm also as possible; for, by the practice of this simple remedy alone, I have known many

instances of patients being cured of very troublesome swellings in the eyelids.

After that the unfortunate children, attacked by the small-pox, have been but an hour in such a situation, they will be evidently seen to derive relief in proportion to their having been previously shut up; but with this simple precaution, that their eyes should be guarded by a small shade of green silk, in order to keep off the glare of broad light, and to prevent the consequent effects of its irritation.

CHAPTER VI.

Inconveniences and Dangers of the common Kind of Spectacles.

COMMON spectacles, made as it were by chance, and, as is vulgarly termed, though truly, "manufactured by wholesale," from all sorts of defective materials, even some-

times from the common window glass, are much to be complained of; and if the public could be brought to reflect seriously upon the dangerous effects which result from their use, the whole tribe of Jew opticians, as dangerous to the full as the quacking oculist, would soon be deprived of a venal gain, founded on the ignorance and inattention of their customers.

I shall state a few points in which the common glasses are always defective, in hopes that no idea of cheapness or economy shall in future induce, even the poorest, to have recourse to those which infallibly destroy the sight they were expected to assist and to preserve.

It is, indeed, a matter of serious import to the poor in general, and worthy the attention of the benevolent, that a charity should be formed on the principle of the "Rupture Societies," at whose house there might be a supply of good optical glasses, with a respectable dispenser, skilled in this particular branch of medicine,

who would distribute good spectacles to the poor that were absolutely in want of them, and even supply the decenter classes with them at a cheap rate.

The results of this would be highly beneficial, not only in supplying good glasses, but in preventing those from using any whatever who did not require them.

Such an establishment would not interfere with the benevolent practice of those oculists in the metropolis who so charitably dedicate large portions of their time to the diseased, nor with the charitable establishments for diseases of the eye; but might, indeed, be engrafted on the latter, and would tend much to prevent the necessity of surgical or medical assistance.

The points of complaint respecting the common spectacles, in general, are,

That their assortment of the lenses is irregular, one of the glasses having generally a different focus from the other;

That they are badly polished, which affects their transparency;

That the two glasses, or lenses, are never of an equal thickness;

That the glass is often full of specks and imperfections, which, being partly ground down, are not easily observable;

And, finally, that the convexity is not regular, the sides not only differing, but different degress of convexity being absolutely on the same side of the lens.

One great cause of all these evils is in the mode of grinding them, one person attending to several at a time, although good opticians will agree with me, that one lens at a time is sufficient for a workman's attention, if it is to be properly ground. It is, indeed, a general principle with honest opticians, that the utmost attention of the workman ought to be paid to the preservation of a regular sphericity in each lens, whether convex or concave; for which reason each must be kept perpendicular to the plane of the machine, a

thing which cannot be done if two are ground at once, for neither of them can be perfect, on account of being obliged to change them from hand to hand alternately.

It may also be observed, that if so much attention is requisite to form one good glass, it is easy to conceive that an infinity of defects must exist in those which are made from two to six at a time; if, indeed, any good lenses should be found in the latter case, which no doubt sometimes happens, it is merely a matter of chance. The cheapness of these glasses, unfortunately, is a bait to many; but I cannot sufficiently deplore the ignorance of those who are so inattentive to the preservation of their most precious faculty, and whose wants are essentially different from any others to which the human frame is subject.

In clothing, for example, it is of little importance to the health, whether the materials are fine or coarse; but then,

the sight can only be preserved by the use of good lenses, whilst the best are never sufficient to supply the loss which the visual organ suffers when its powers begin to decay.

I have known several persons, who, for the space of ten, nay, even twenty years, have preserved the same degree of power and extent in the visual faculty; an advantage which the use of the common spectacles would never have procured for them. On this point I shall enter into a few details.

As the common glasses have different degrees of convexity or of concavity, it of course happens, that they never represent objects correctly, or of their natural colour, but make them appear crooked, and tinged with refracted rays along their outlines, which produces in the eyes a kind of attraction, or drawing forward, the oblique muscles being thus obliged to lengthen, in order to see the object distinctly.

The inequality of *foci* also produces strange confusion; a common glass will sometimes have a focal distance of twelve inches at the centre, and only ten at the circumference; besides which, it may be often found assorted with another lens, whose central focus is only ten inches, and at the circumference, perhaps, fourteen.

From this it is easy to imagine what injury must be done to weak eyes, but whose powers are equal, when thus obliged to change the diameter of the pupil every instant. These defective glasses sometimes produce a kind of sparkling, in consequence of the rays of light being irregularly broken: indeed, this inconvenience cannot be guarded against in the best lenses, unless they are made of tinged glass, either green, yellow, or blue, so as to preserve the equality of one predominant colour.

Independent of the false tints, these lenses hurt the sight, in consequence of

their accustoming the eye to see objects differently from the rest of the world; and their use, even where they do render some little service, is but falling into Charybdis whilst avoiding Scylla.

I must confess that there are instance in which we are obliged not only to tolerate, but even to recommend, such irregular spectacles, in consequence of some eyes being so morbidly affected, that the worst glasses are for them the best. In truth, it would be a good thing, in such cases, where the disorder has arisen at first from the use of irregular lenses, if we could apply dissimilar ones for the cure, that is to say, of a contrary degree of irregularity to those which have been used. But this is attended with great difficulty; for, though these irregular lenses are very common, it is still next to impossible to find two which shall be directly the reverse of each other in their optical qualities; for which reason all care and

attention, and all medical science, are completely at a stand in most of such cases.

Another effect of the common spectacles is that of producing, in time, spots and callosities in the *cornea* and *chrystalline.* In that state, people imagine, when they look towards the sky, that they perceive minute bodies floating in the air; they endeavour to drive them away, but their efforts are vain, for these are nothing more than minute parts of the *cornea,* or *chrystalline,* which are dried up, or hardened by the too great quantity of light which bad spectacles have permitted to pass into the eye.*

---

* On this subject much has been written by De la Hire, a French optician, who observed that when a candle, situated beyond the limits of distinct vision, is viewed through a very narrow chink in a card, in that case a considerable number of candles, sometimes so many as six, will be seen along the chink. This appearance he supposes to arise from small irregularities in the surface of the humours of the

These callosities prevent one portion of the rays of light from falling upon the retina, whilst other rays mark the image of the object thus apparently spotted with dark points; when, at the same time, the rapid vacillation of the axis of the eye

---

eye, the effect of which is not sensible when rays are admitted into the eye through the whole extent of the pupil, and consequently one principal image effaces a number of small ones; whereas, in this case, each of them is formed separately, and no one of them is so considerable as to prevent the others from being perceived at the same time.

The same philosopher, in endeavouring to explain the cause of the dark spots alluded to in the text, observed, that they were most visible when the eyes were turned towards an uniform white object, such as the snow in the open fields. If, in that case, the spots appeared fixed whilst the eye was at rest, he supposed them to be occasioned by extravasated blood upon the retina; but when they were moveable, he considered them as proceeding from opaque matter floating in the *aqueous* humour of the eye, considering that the vitreous humour was not sufficiently limpid for that purpose.

produces an appearance of numberless quick moving objects.

As the most usual defect in common spectacles is, that of the irregularity of their curvature or sphericity, it may be proper to state an easy mode of ascertaining this.

We know that every convex and accurate lens, if exposed to the sun's rays, describes a correct luminous circle at its proper focus. If this experiment is made with a defective lens, then this circle will neither be so perfectly round, so small, nor so bright as that of a good lens of similar size and power. This experiment also shews us, at the same time, how the luminous irregularity of common glasses forces the pupil either to contract or enlarge beyond the regular process prescribed by Nature.

In spite, however, of all that can be said against these common and irregular lenses and spectacles, I fear that a great

many indiscreet people will still continue to make use of them; still, I must hope, that some few judicious persons may not only give me credit for my present attempt, but, perhaps, be induced to patronize the formation of the proposed plan, which, amongst the poor at least, would be attended with beneficial consequences.

THE END.

LONDON:
PRINTED BY B. CLARKE, WELL-STREET.

WORKS

PRINTED FOR HENRY COLBURN AND CO.

CONDUIT STREET.

---

1. THE ART of EMPLOYING TIME to the greatest Advantage—the true Source of Happiness; 1 vol. Post 8vo.

"Time is the only property of which we should be avaricious. The art of employing it is but the art of being happy."

2. THE PHILOSOPHY of LIFE. By SIR CHARLES MORGAN, M.D. and Fellow of the Royal College of Physicians of London. 8vo. 14*s.*

"Sir C. Morgan has here presented us with a book containing a great deal of useful and entertaining information. He has undertaken to consider man as an organized being; to explain his structure, and how it is affected by various modes of treatment. To shew the influence of climate, diet, &c. upon the human frame, and to connect this influence with the moral and intellectual character of the mind. In conducting this investigation he has had an opportunity of calling to his aid, not only the knowledge of his own peculiar profession, but the discoveries of modern chemistry, interesting facts in natural history, and illustrations from general science, and the history of nations. The work contains many plain and sensible lessons on the best methods of keeping both mind and body in a healthy state."

3. PRACTICAL ECONOMY; or, the Application of Modern Discoveries to the Purposes of Domestic Life, 2nd. Edition, 12mo. 7*s.* 6*d.*

"This work will be found equally useful to those who are wise enough to enter into the practice of the rules which it lays down, and entertaining to others, who may merely wish to amuse themselves with its theories. It contains a variety of new and useful information, calculated at once to increase our comforts, and diminish our expenses."

New Monthly Magazine.

4. BATHING. An ESSAY on WARM, COLD, and VAPOUR BATHING; with Observations on Sea-Bathing, Bilious Liver Complaints, and Dropsy. By SIR ARTHUR CLARKE, M.D. &c. Fifth Edition, revised. 5*s.* 6*d.*

"This work will be found to contain more useful instruction and more valuable practical remarks than any that has appeared on the subject." *Gazette of Health, No.* 39

5. THE ART of PRESERVING the FEET; or, Practical Instructions for the Prevention and Cure of Corns, Bunnions, Callosities, Chilblains, &c. with Observations on the Dangers arising from improper treatment, Advice to Pedestrians, &c. To which are added, Directions for the better Management of the Hands and Nails. By an EXPERIENCED CHIROPODIST. Second Edition. 12mo. 5*s.* 6*d.*

Each page of this work will be found to contain some useful information. — *Gazette of Health.*

6. AN ESSAY on DISEASES of the SKIN, containing Practical Observations on Sulphureous Fumigations in the Cure of Cutaneous Complaints, with several remarkable Cases. By SIR ARTHUR CLARKE, M.D. 4*s.* 6*d.*

7. HISTORY of CULTIVATED VEGETABLES, comprising their Botanical, Medicinal, Edible, and Chemical Qualities. Natural History, and Relation to Art, Science, and Commerce. By HENRY PHILLIPS, Author of the Pomarium Britannicum, or History of Fruits known in Great Britain. In 2 vols. 8vo.

Also by the same Author,

8. THE HISTORY of FRUITS known in GREAT BRITAIN. Second Edition, in 1 vol. 8vo. 10*s.* 6*d.* boards.

"We know of no class of readers which is not much obliged to Mr. Phillips for this very useful and very entertaining publication. It is one of those popular works, which combining in a happy degree the pleasing with the instructive, teach us science as an amusement, and promote information and improvement by lively anecdote and curious story. From the most learned horticulturist, to the least anxious epicure that bites an apple, this volume deserves a friendly reception; and we are sure that it only needs to be known to become a favorite. For extent of information, utility, and most of the other good qualities, which can be desired in a production of its kind, it is really deserving of the warmest eulogy.—*Literary Gazette.*

9. THE HERMIT in LONDON! or, SKETCHES of ENGLISH MANNERS. New Edition. 3 vols. small 8vo. Price 21*s.*

10. THE HERMIT in the COUNTRY. By the same Author, 3 vols. 18*s.*

"Quite weary grown
Of all the follies of the town,
And seeing in all public places
The same vain fops, and painted faces."

11. AMUSEMENTS in RETIREMENT; or, the Influence of Literature, Science, and the Liberal Arts, on the Manners and Happiness of Private Life. By the Author of the "Philosophy of Nature." &c. Second Edition, 8vo. 10*s.* 6*d.*

12. THE BEAUTIES of CHRISTIANITY. By F. A. DE CHATEAUBRIAND, Author of Travels in Greece and Palestine, Atala, &c. Translated from the French, with a Preface and Notes, by the Rev. HENRY KETT, B.D. Fellow of Trinity College, Oxford. 3 vols. 8vo. 31*s.* 6*d.* boards. Ditto in French.

"We know no book which has been published for many years that has given us so much pleasure as Chateaubriand's Beauties of Christianity. The work will amply repay perusal even to those whose minds are not peculiarly religious; but to those who are, it will be eminently gratifying."
Universal Magazine.

13. SUPPLEMENTARY VOLUME to LORD ORFORD'S WORKS, comprising his LETTERS to GEORGE MONTAGU, Esq. and the Rev. WILLIAM COLE. 4to. 2*l.* 2*s.*

14. MEMOIRS of JOHN EVELYN, Esq. the celebrated Author of Sylva, &c. written by himself: printed from the original MS. in the Library at Wotton. Edited by WILLIAM BRAY, Esq. Fellow and Treasurer of the Society of Antiquaries, &c. handsomely printed in 2 vols. royal 4to. embellished with Portraits and other Engravings by the first Artists. Price 5*l.* 15*s.* 6*d.* boards.

"All persons, indeed, may find in his character something for imitation, but for an English gentleman he is the perfect model." *Quarterly Review.*

15. PRIVATE CORRESPONDENCE of DAVID HUME the Historian, now first published from the Originals in the possession of the Editor. 4to. 1*l.* 11*s.* 6*d.* boards.

16. MEMOIRS of GRANVILLE SHARP, Esq. composed from his own Manuscripts and other authentic Documents, in the possession of his Family and of the African Institution. By PRINCE HOARE. 4to. with a Portrait. Price 2*l.* 12*s.* 6*d.* boards.

17. MEMOIRS of BENJAMIN FRANKLIN, LL.D. F.R.S. &c. including his Correspondence and Posthumous Writings, now first published from the Original MSS. By his Grandson, WILLIAM TEMPLE FRANKLIN, Esq. in 6 vols. 8vo. with a Portrait, and other Plates. Price 3*l.* 12*s.* boards.

NEW PUBLICATION.

18. ITALY. By LADY MORGAN. Author of "France," Florence Macarthy, O'Donnel, &c. A new Edition, in 3 vols. 8vo.

"Lady Morgan has given us more information on the actual state of society in Italy at the present moment than can be found in any of the numerous publications which have made their appearance since the peace."

New Monthly Magazine.

"This is not merely a work of opinions expressed in the ornamental style of the writer. It is a substantial account of Italy, and may be consulted for its facts by the historian, the traveller, and the topographer."—*Monthly Magazine.*

"We may compare her lighter and happier efforts to those schools of Painting which she seems most to admire—the Dutch, Flemish, and Venetian. Of these the characteristics are brilliant colouring, contrast, variety, bustle, spirited details, pleasing imitation; and in such traits consist the excellence of Lady Morgan.—*Monthly Review, Nov.*

THE NEW MONTHLY MAGAZINE and LITERARY JOURNAL. Nos. 1 to 12, for the Months of January to December, 1821, 3*s.* 6*d.* each.

The attention of the Public is respectfully invited towards the New Series of this Journal, which was commenced the 1st of January, on a new and very improved plan; the Original Papers being printed on a large type similar to those in the Quarterly and Edinburgh Reviews, and the Miscellaneous Departments so arranged as to form a distinct Volume at the end of the year; thus combining in the same work the several characters of a MAGAZINE, a REVIEW, and an ANNUAL REGISTER.

Under the superintendence of the present Editor, this work will be devoted to the contributions of persons of the highest talent, it being the determination of the Publishers to spare no expense in order to present to the world a Monthly Journal adapted in every respect to the present improved state of society, and possessing a greater fund of amusement and information than has hitherto been attempted.

Among other Papers of peculiar interest now in the course of publication, are Mr. CAMPBELL'S LECTURES on POETRY, the substance of which was recently delivered at the Royal Institution; and those who may desire to possess the New Series, from its commencement in January, are requested to transmit their orders without delay to their respective Booksellers and Newsmen to prevent disappointment. It may also be regularly transmitted abroad, by applying to any Postmaster.